January, 1991
Supersedes Bulletin 7.1.2-1E,
pages 1-4, dated May, 1989.
Mailed to: E, D, C/41-100B

Device Number: 50GS, 51GS

GROUND SHIELD®

Type GRC and TMC, TMS Ground Fault Relay Systems

Features

- **Fast, sensitive protection**
- **Adjustable pickup and time delay**
- **Wide choice of current sensors**
- **Seismic capability to 6g ZPA**
- **Optional test panel**
- **UL listed**
- **2 year warranty**

Application

The GRC Ground Fault Relay Systems offer fast, sensitive protection against ground-faults including destructive, low magnitude, arcing ground-faults in solid and resistance grounded distribution systems. They consist of a special design, core-balance current transformer (sensor) and a low-burden, solid state ground relay.

The ground sensors are available with small or large window configurations designed to enclose all phase and neutral or ground return bus or cable conductors.

Lower pickup ranges are normally used for protection of individual loads such as motors, transformers or branches in solidly grounded systems. They are also employed for protection of high or medium resistance systems where coordination depends mostly on time settings.

Medium and high pickup ranges find applications for main, feeder and circuit protection in low resistance or solidly grounded systems.

Ungrounded (3-wire) power systems require an artificial neutral and should be converted to a high resistance type for proper application. Tripping of the desired breaker (coordination) is obtained by applying relays with successively faster curves progressing from source to load circuits.

Application of these systems is simple and direct. One sensor and one relay are used with any type of circuit. The sensor is selected by physical size; the relay by sensitivity range and speed of operation. A minimum pickup setting of the relay offers maximum system protection but at possible sacrifice in selectivity depending on the downstream equipment characteristics.

Pickup or sensitivity of GRC relay family spans from 2A to 1200A and is available in (4) ranges. The relay provides seven time current curves of definite time shape, figure 3. All relay calibrations are in primary amperes. Standard output is a solid state switch (thyristor). Optional trip or alarm contact outputs are available in Type TMC, TMS Ground Fault Monitor Panels.

An interlock is available for use in double-ended substations or tie applications.

Type GRC relay can be used with or without Type TMC or TMS monitors.

Type TMC, Type TMS
Test and Monitor Panel (Optional)

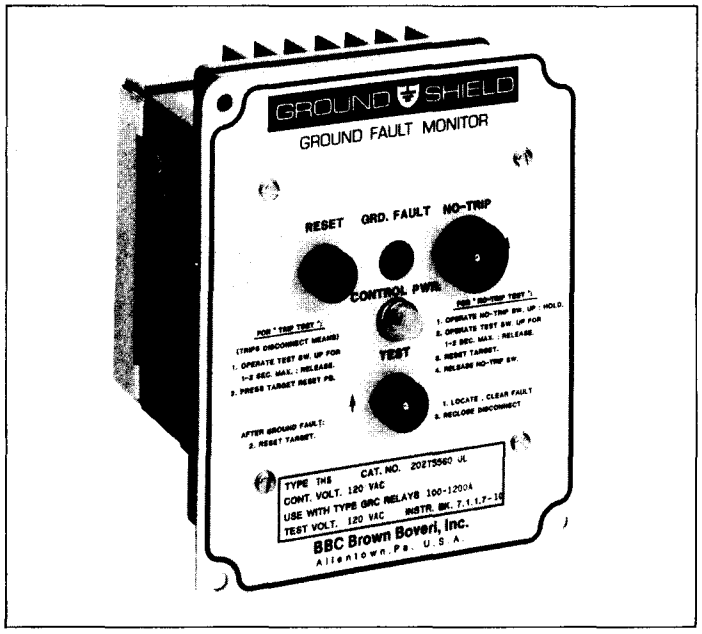

Features

- Flush mounting case
- Ground fault indicator
- Control power lamp
- Trip or No-Trip test of GRC relay
- Optional output contacts for tripping or alarm
- Sensor testing (Type TMS only)
- UL listed

Application

The Types TMC, TMS Test and Monitor Panel is an optional, flush mounted unit for use with the standard GRC Ground Fault Relay System. Standard features include: 1) A CONTROL POWER LAMP to indicate the presence of control power to the relay system. 2) A ground fault OPERATION INDICATOR which maintains indication even on loss of control power. 3) A TEST switch for performing an operational test on the GRC ground relay. 4) A NO-TRIP switch to prevent the disconnect from tripping when the operational test is performed, if continuity of service must be maintained. 5) A RESET pushsbutton to reset the target from orange to black.

An auxiliary output relay can be provided as an option for trip, remote alarm or other purposes. Its contacts are reset after a relay operation by the RESET pushbutton.

The Type TMS monitor is provided with test circuits and current limiting resistors to inject a test current into the sensor test winding.

Figure 1. Wiring Diagrams for Ground Relays Types GRC and TMC

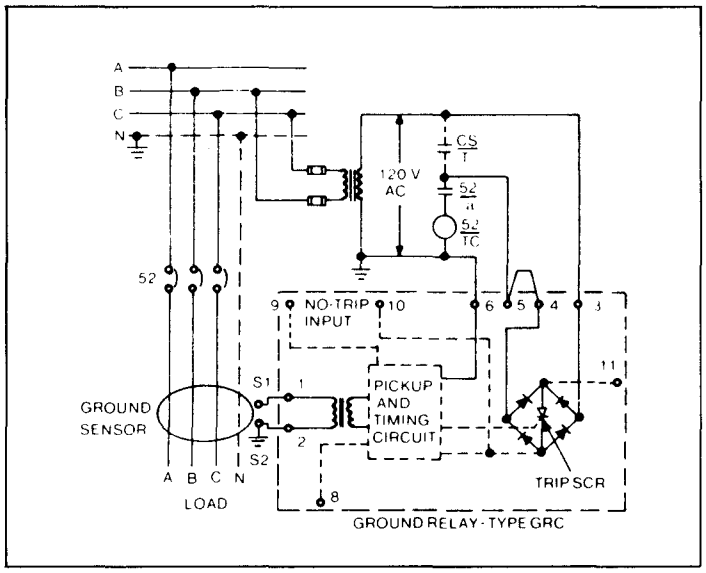

Figure 1a: Type GRC Relay Without TMC Monitor Unit (120 Vac Control)

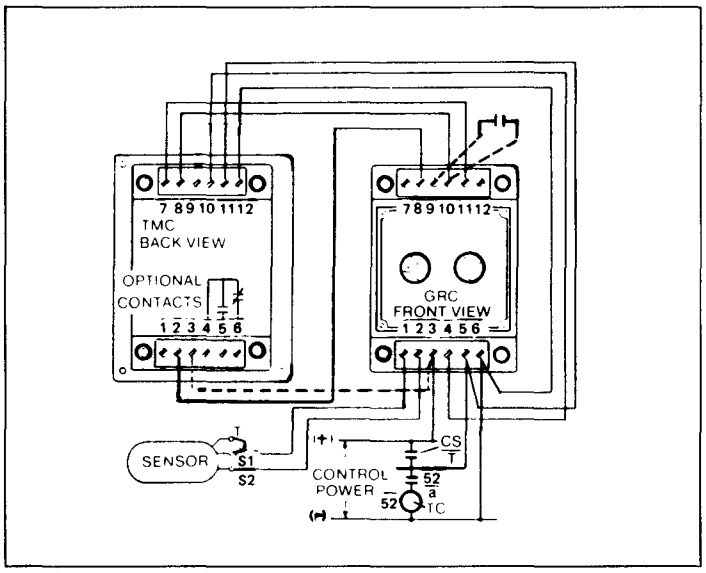

Figure 1b: Type GRC Relay With TMC Monitor Unit (125 Vdc Control)

Notes:

1. System "neutral to ground" connection must be on source side of ground sensor. DO NOT ground neutral anywhere downstream from sensor location.
2. Control power source should have sufficient capacity to accommodate trip coil inrush current and to avoid excessive voltage collapse during operation. Control transformer (if used) must be connected line-to-line in a power circuit. Type TMS monitor requires 120 Vac control power to supply 0.5-5A for sensor testing.
3. Special precautions must be taken when applying ground fault relaying on 4 wire multi-source or double ended substations. Refer to factory for additional information.
4. Sensors provided with the T terminal, a shorting link is required between Terminals T and S1 (except if Type TMS monitor is used).
5. Connection shown dotted in figure 1b must be made when alarm contacts are provided.
6. Type GRC relay is self-resettable upon breaker trip and ground fault removal.

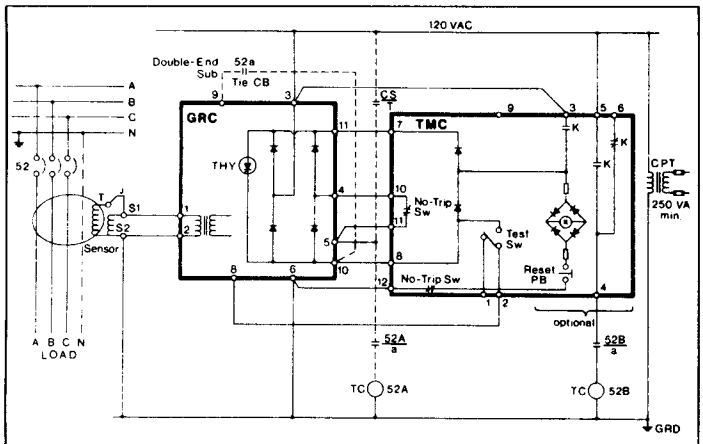

Type GRC-TMC without sensor test

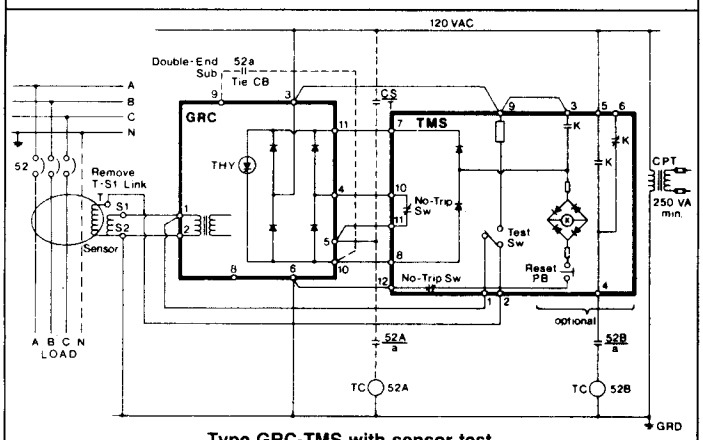

Type GRC-TMS with sensor test

Figure 2. Interconnection Diagrams (120 Vac Control)

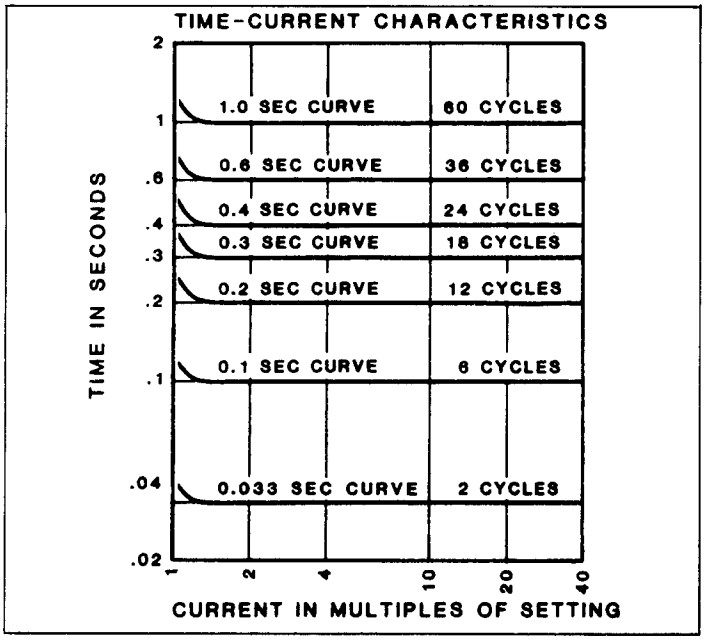

Figure 3. Time-Current Curve for Type GRC

Specifications — Type GRC

Input Signal: Current from a secondary winding of a type GS sensor.

Primary Trip Amperes: (25/50/60 Hz)
Switch selected
2,4,8,12,16,20,24A
5,10,20,30,40,50,60A
20,40,80,120,160,200,240A
100,200,400,600,800,1000,1200A

Time Delay: Definite Time as shown in figure 2.
Switch selected: Inst. (0.033), 0.1,0.2,0.3,0.4,0.6,1.0 sec.

Momentary Withstand:

Range:	2-60A;	20-240A;	100-1200A
2 Cycles:	200,000A;	200,000A;	200,000A
0.5 sec.:	65,000A;	65,000A;	65,000A
continuous:	300A;	1200A;	3000A

Output Rating:
Thyristor (SCR) 30 ampere rms for 2 cycles
7.5 amperes rms for 1 second
1 ampere continuous
(DC models)
0 ampere continuous
(AC models)

Control Power: Models available
24,32,48,125,Vdc; 120Vac
Max. operating voltage — Nominal + 10%
Min. operating voltage — 55% of nominal (AC)
80% of nominal (DC)

Operating Temperature: Minus 20°C to plus 70°C

Seismic Capability: More than 6g's ZPA either axis biaxial broadband multifrequency without damage or malfunction (ANSI/IEEE C37.98)

Transient Immunity: More than 2500V, 1MHz bursts at 400 Hz repetitive rate continuous (ANSI C37.90A SWC); Fast transient test; EMI test.

Control Source Drain: 10 ma (stand-by) for GRC

Specification — Types TMC, TMS

Control Power: Must have same nominal control voltage rating as its associated GRC relay. Models available for 24/32, 48, 125 Vdc, 120 Vac

Control Source Drain: Negligible at stand-by, 15 mA upon auxiliary relay pickup (optional)

Sensor Test Source: (Type TMS only) 120 Vac +10, −20%

Contact Rating: for optional auxiliary relay, at 125Vdc.
30 amps RMS for 0.033 sec.
5 amps RMS continuous
1 amp break (resistive)
0.3 amp break (inductive)

Type GS Ground Sensors

The current sensor consists of a wound core of small cross section with a uniformity distributed secondary winding. Solid core units have the entire assembly cast in epoxy. Split core units are separable for easy installation over existing cables or bus.

Size & Shape		Catalog Numbers
Type GS - Ground Sensors - Solid Core		
2" round	(See note 5)	302B0200UL
3" round	(See note 5)	302B0300UL
5" round	(See note 4)	302G0500UL
8" round	(See note 4)	302G0800UL
7" x 21" rect.	(See note 4)	302L0721UL
7" x 25" rect.	(See note 4)	302L0725UL
7" x 27" rect.	(See note 4)	302L0727UL
7" x 31" rect.	(See note 4)	302L0731UL
7" x 37" rect.	(See note 4)	302L0737UL
10" x 13" rect.	(See note 5)	302B1013UL
10" x 17" rect.	(See note 5)	302B1017UL
10" x 24" rect.	(See note 5)	302B1024UL
16" x 20" rect.	(See note 5)	302B1620UL
Type GS - Ground Sensors - Split Core		
8" round	(See note 5)	302D0800UL
7" x 7" rect.	(See note 4)	302T0707UL
7" x 10" rect.	(See note 4)	302T0710UL
7" x 17" rect.	(See note 4)	302T0717UL
7" x 24" rect.	(See note 4)	302T0724UL
7" x 30" rect.	(See note 4)	302T0730UL
7" x 37" rect.	(See note 4)	302T0737UL
10" x 10" rect.	(See note 4)	302T1010UL
10" x 17" rect.	(See note 4)	302T1017UL
10" x 24" rect.	(See note 4)	302T1024UL
10" x 30" rect.	(See note 4)	302T1030UL

Notes:
1. Sensors are 600V class devices. Follow air and surface clearance requirements of electrical designs.
2. For sensor dimensions see Section 7.10.0.2.
3. For complete and additional ordering information both ground fault relays and sensors, refer to Section 7.1.0.3.
4. Suitable for use with either TMC or TMS monitor. Sensors are provided with "T" terminal (test winding).
5. Suitable for use with TMC monitor. (Does not include test winding).
6. GRC relays without monitor option can operate from all type GS sensors.

UL = Listed by Underwriters' Laboratories, Inc. and by Canadian Standards Association.

How To Specify

Ground fault protection shall be the Type GRC system or approved equal, consisting of (1) Type GRC relay and (1) Type GS current sensor. Sensitivity and operating time shall be adjustable on the front panel. Relay shall be capable of withstanding up to 6g ZPA seismic stress without damage or malfunction at minimum settings.

Optional: The Type TMC Test and Monitor Panel or approved equal shall be provided to perform the following functions: control power indication, built-in means of testing the ground relay with or without tripping the disconnect device, operation indicator which retains the indication on loss of control power.

How To Order

For each circuit to be protected order (1) Type GRC relay and (1) Type GS current sensor. Select 2-24 or 5-60A range relay for single motors, transformers, and high resistance grounded systems. Select 100-1200A or 20-240A range relay for main, tie, feeder, and branch circuits. Also select the relay based on the control voltage source. Select the optional TMC or TMS monitor panel by the control voltage source.

Refer to page 5 for Catalog Numbers.

Select a Type GS current sensor from the table on this page. Select a solid core or a split core type. Split core sensors allow easier installation of ground fault protection to existing system, since disconnecting bus work or cables is not necessary. Select a size which will encircle all phase conductors (including the neutral on a 4 wire system).

Further Information

List Prices: PL 41-020
Technical Data: TD 41-025
Instruction Book, Type GRC: IB 7.1.1.7-5①
Instruction Book, Type TMC: IB 7.1.1.7-10①
Field Test Instruction (NEC): 7.1.1.7-9.1①

Other Protective Relays:
Application Selector Guide, TD 41-016

① Available upon request, only from Allentown Plant.

Printed in U.S.A.

January, 1991

January, 1991
Supersedes Section 7.1.0.3, Type GRC and TMC, TMS on pages 1 and 6, dated September 1, 1990.
Mailed to: E, D, C/41-100B

Surface Case
Definite Time Characteristic
Time Curve: 0.033-1.0 sec.
Thyristor Output
Double-End (no trip) Interlock

GROUND SHIELD®

Type GRC and TMC, TMS Ground Fault Relay Systems

Type	(Primary Bus) Pickup Range	Control Voltage	Catalog Number
GRC	2-24A	24/32 Vdc	202K9601UL
		48 Vdc	202K9631UL
		125 Vdc	202K9641UL
		120 Vac	202K9661UL
	5-60A	24/32 Vdc	202K9101UL
		48 Vdc	202K9131UL
		125 Vdc	202K9141UL
		120 Vac	202K9161UL
	2-240A	24/32 Vdc	202K9701UL
		48 Vdc	202K9731UL
		125 Vdc	202K9741UL
		120 Vac	202K9761UL
	100-1200A	24/32 Vdc	202K9301UL
		48 Vdc	202K9331UL
		125 Vdc	202K9341UL
		120 Vac	202K9361UL

Internal Connections: Type GRC, 12S202VM

Type TMC, TMS Monitor/Test Panel (Optional, for GRC Relays) Semi-Flush Mounting

Type	Use with GRC Pickup Range	Output	Internal Connections	(See Note 1) Catalog Number
TMC	All	.....	12F202VN	202T30x0UL
	All	1 form C	12F202VN	202T30x4UL
TMS With Sensor Test Feature (See Note 2)	2-24A	.....	12F202VT	202T58x0UL
	5-60A	.....	12F202VT	202T57x0UL
	20-240A	.....	12F202VT	202T56x0UL
	100-1200A	.....	12F202VT	202T55x0UL
	2-24A	1 form C	12F202VT	202T58x4UL
	5-60A	1 form C	12F202VT	202T57x4UL
	20-240A	1 form C	12F202VT	202T56x4UL
	100-1200A	1 form C	12F202VT	202T55x4UL

Notes: 1. Each of the listed catalog numbers contains and "x" for the control voltage designation. To complete the catalog number, replace the "x" with the proper control voltage digit:

24/32 Vdc 0
48 Vdc 3
125 Vdc 4
120 Vac 6

UL – Listed by Underwriters Laboratories, Inc., and by Canadian Standards Association.

2. For use with (1) Type GS test winding sensor, series 302L, 302T or 302G.
Ground Fault Relays – Use with 1-Type GS Sensor from Tables A and B, on page 7.

Internal Connection Diagrams

GROUND FAULT RELAYS (TYPE GRC) AND
GROUND FAULT MONITORS (TYPE TMC)
AC OR DC CONTROL POWER

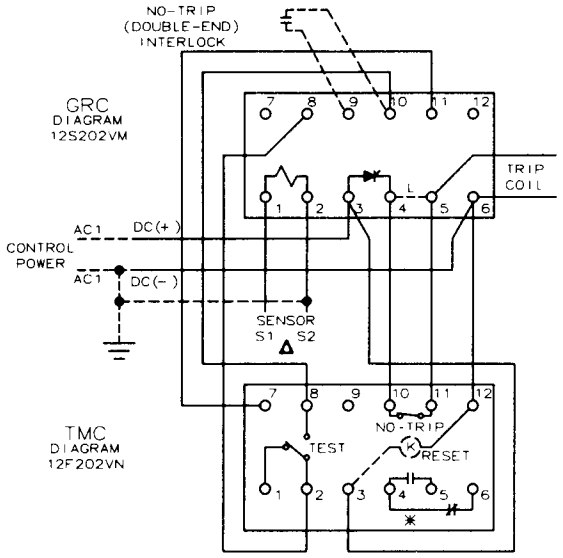

L - REMOVE LINK IF TMC MONITOR IS CONNECTED
- IF SENSOR IS PROVIDED WITH THE T TERMINAL SHORT IT TO THE S1 TERMINAL
✱ - OPTIONAL OUTPUT CONTACTS

GROUND FAULT RELAYS (TYPE GRC) AND
GROUND FAULT MONITORS (TYPE TMS)
AC CONTROL AND TEST

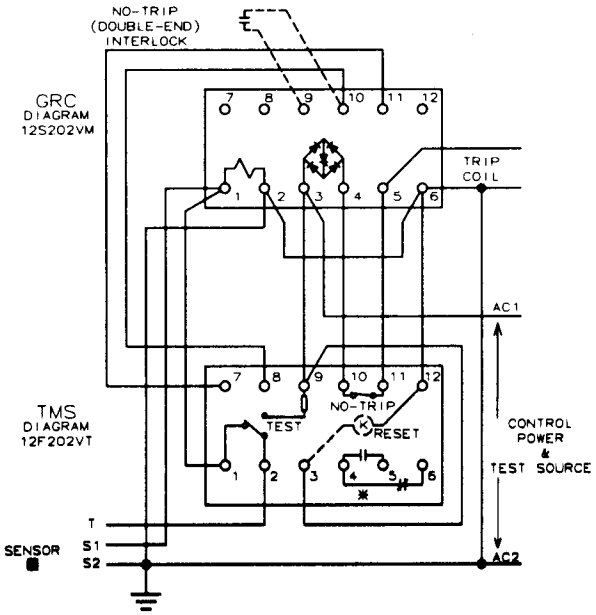

■ REMOVE LINK FROM SENSOR TERMINALS T & S1 IF PROVIDED
✱ OPTIONAL OUTPUT CONTACTS

GROUND FAULT RELAYS (TYPE GRC) AND
GROUND FAULT MONITORS (TYPE TMS)
DC CONTROL POWER, AC TEST

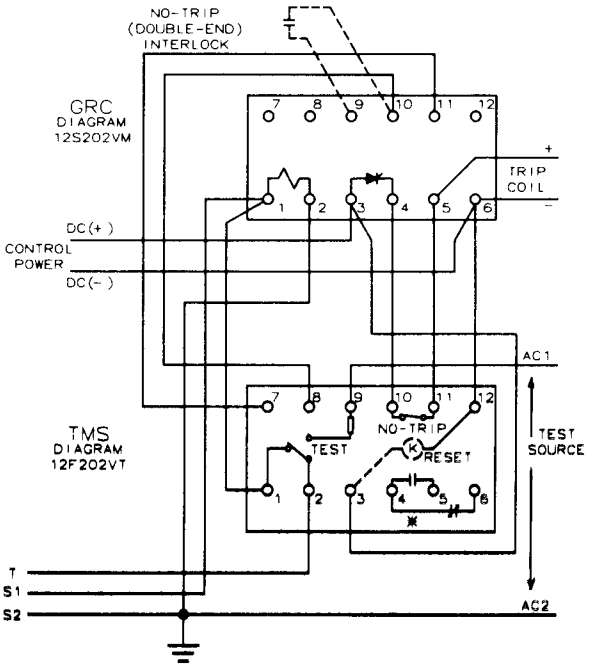

■ REMOVE LINK FROM SENSOR TERMINALS T & S1 IF PROVIDED
✱ OPTIONAL OUTPUT CONTACTS

Table A – Type GS Ground Fault Sensors – Solid Core

Size & Shape	Catalog Number	
2" round	302B0200UL	
3" round	302B0300UL	
5" round	302G0500UL	See Note 1
8" round	302G0800UL	See Note 1
7" x 21" rectangular	302L0721UL	See Note 1
7" x 25" rectangular	302L0725UL	See Note 1
7" x 27" rectangular	302L0727UL	See Note 1
7" x 31" rectangular	302L0731UL	See Note 1
7" x 37" rectangular	302L0737UL	See Note 1
10" x 13" rectangular	302B1013UL	
10" x 17" rectangular	302B1017UL	
10" x 24" rectangular	302B1024UL	
16" x 20" rectangular	302B1620UL	See Note 2

Table B – Type GS Ground Fault Sensors – Split Core

Size & Shape	Catalog Number	
8" round	302D0800UL	
7" x 7" rectangular	302T0707UL	See Note 1
7" x 10" rectangular	302T0710UL	See Note 1
7" x 17" rectangular	302T0717UL	See Note 1
7" x 24" rectangular	302T0724UL	See Note 1
7" x 30" rectangular	302T0730UL	See Note 1
7" x 37" rectangular	302T0737UL	See Note 1
10" x 10" rectangular	302T1010UL	See Note 1
10" x 17" rectangular	302T1017UL	See Note 1
10" x 24" rectangular	302T1024UL	See Note 1
10" x 30" rectangular	302T1030UL	See Note 1
10" x 37" rectangular	302T1037UL	See Note 1

Notes:
1. Sensor includes test winding for relay/sensor testing.
2. For use with ground fault relays with 100-1200A range.

UL – Listed by Underwriters Laboratories, Inc., and by Canadian Standards Association.

Sensors and Relay Test Cable, 19 Turns Per Loop, Catalog Number 202W1219

For Sensors Other Than Listed Here, Consult Factory.