Document: VF010H07

TOSHIBA

# INSTRUCTION MANUAL

INSTALLATION - OPERATION - MAINTENANCE

## CV-1JBU Vacuum Contactor, 1.5kV - 600A
## CV-1KAU Vacuum Contactor, 1.5kV - 720A

Issued:5/00

Manufactured in the USA

# TOSHIBA

# INSTRUCTION MANUAL

### For the Installation, Operation and Maintenance of

## CV-1JBU Vacuum Contactor, 1.5kV – 600A
## CV-1KAU Vacuum Contactor, 1.5kV – 720A

**⚠WARNING** **Never attempt to install, operate, maintain or dispose of this equipment until you have first read and understood all of the relevant product warnings and user directions that are contained in this Instruction Manual.**

To contact Toshiba, address all correspondence to:

Field Service Department
Toshiba International Corporation
13131 West Little York Road
Houston, Texas 77041 USA

or call:

(713) 466-0277
(800) 231-1412
(800) 527-1204 (Canada)

Fax: (713) 466-8773

Please complete the following information for your records and retain with this manual:

Model: _____

Serial Number:_____

Date of Installation: _____

Inspected by: _____

Reference Number: _____

© TOSHIBA INTERNATIONAL CORPORATION, 2000

**IMPORTANT MESSAGES**

**Read this manual and follow its instructions.** Signal words such as DANGER, WARNING and CAUTION will be followed by important safety information that must be carefully reviewed.

| | |
|---|---|
| **⚠DANGER** | Indicates a situation that will result in death, serious injury, and severe property damage if you do not follow instructions. |
| **⚠WARNING** | Means that you might be seriously injured or killed if you do not follow instructions. Severe property damage might also occur. |
| **⚠CAUTION** | Means that you might be injured if you do not follow instructions. Equipment damage might also occur. |
| **NOTE** | Gives you helpful information |

**READ SAFETY SIGNS**

To avoid injury, you must read and follow all safety signs.

Keep the safety signs visible and in good shape. Never remove or cover any safety signs.

**QUALIFIED OPERATORS ONLY**

Only qualified persons are to install, operate, or service this equipment according to all applicable codes and established safety practices.

**A qualified person must:**

1) **Carefully read the entire instruction manual.**
2) Be skilled in the installation, construction or operation of the equipment and aware of the hazards involved.
3) Be trained and authorized to safely energize, de-energize, clear, ground, lockout and tag circuits in accordance with established safety practices.
4) Be trained and authorized to perform the service, maintenance or repair of this equipment.
5) Be trained in the proper care and use of protective equipment such as rubber gloves, hard hat, safety glasses, face shield, flash clothing, etc. in accordance with established practices.
6) Be trained in rendering first aid.

**SAFETY CODES**

Toshiba CV-1JBU and CV-1KAU vacuum contactors are designed and built in accordance with NEMA ICS 3-2, UL 508, CSA 22.2-14 and IEC 60470. Installations must comply with all applicable state and local codes, adhere to all applicable National Electric Code (NFPA 70) standards and instructions provided in this manual.

**⚠DANGER** **HAZARDOUS VOLTAGE will cause severe injury, death, fire, explosion, and property damage.**

- Turn off and lock out Primary and Control Circuit Power before servicing.
- Keep all panels and covers securely in place.
- Never Defeat, Modify, or Bypass any Safety Interlocks
- Qualified Operators only

# TABLE OF CONTENTS

**SAFETY** ..... 1

**INTRODUCTION** ..... 6

**GENERAL DESCRIPTION** ..... 7

Components ..... 7
- Contactor Components ..... 7
Indicators and Controls ..... 8
- ON/FF Indicator ..... 8

**RECEIVING, INSPECTION AND HANDLING** ..... 9

Receiving and Unpacking ..... 9
Acceptance Inspection ..... 9
Handling and Moving ..... 9
- Location of Wear Gauge ..... 9

**INSTALLATION** ..... 10

Ambient Conditions ..... 10
Rating Verification ..... 10
Mounting the Contactor ..... 10
Main Circuit Cable Connections ..... 10
Ground Connections ..... 11
- Ground Connection Location ..... 11
Control Circuit Connections ..... 11
- Drive Unit Location ..... 11

**PRE-ENERGIZATION CHECK** ..... 11

General ..... 12
Electrical Checks ..... 12

**OPERATION** ..... 12

Moving Contactor from Disconnected to Connected Position ..... 12
Moving Contactor from Connected to Disconnected Position ..... 13
- Internal Connection of the Normally Energized Type ..... 14
- Configuration of the Drive Unit ..... 14
- Standard Operation Circuit of the Normally Energized Type ..... 15

**MAINTENANCE** ..... 15

Maintenance Program ..... 16
Maintenance Record ..... 16
Servicing Equipment ..... 16
Inspection and Maintenance Types ..... 17
Table 1 – Tightening Torque ..... 17
Table 2 – Check Points for Periodic Inspection ..... 18

Table 3 – Gap/Wipe Standard Values (contactor in new condition) ..... 20
Vacuum Check ..... 21
- Toshiba Portable Vacuum Checker ..... 21
- Application of Test Voltage for Vacuum Check ..... 22
Electrical Service Life ..... 23
Mechanical Service Life ..... 23
- Wipe Measurement ..... 23
Service Life of Capacitor ..... 23
Table 4 – Recommended Part Replacement Intervals ..... 23
- Capacitor Switching Life ..... 23

**STORAGE AND DISPOSAL** ..... 24

Storage ..... 24
Inspection during Storage ..... 24
Disposal

**SPECIFICATIONS** ..... 25

Table 5 – Ratings ..... 25

**WARRANTY AND LIMITATION OF LIABILITY** ..... 26

It is the intent of this manual to provide a guide for ***safely*** installing, operating and maintaining Toshiba vacuum contactors. This manual consists of a section of general safety instructions and is marked throughout with warning symbols. Read this manual thoroughly before installation, operation and maintenance of this equipment.

This manual and all accompanying drawings should be considered a permanent part of the equipment. They should be readily available for review and reference at all times. This manual is not intended to cover all details, combinations, or variations of the equipment. Always refer to drawings accompanying the equipment for additional details.

**All safety warnings must be followed** to ensure personal safety. General safety instructions are found on pages 1 through 3. Read and save these instructions for future reference.

**Follow all precautions** to attain proper equipment performance and longevity.

**Dimensions** shown in the manual are in metric and/or their English equivalent.

This manual is divided into major sections of interest, as follows:

**GENERAL DESCRIPTION** – Provides a description of the equipment, information on major components and how they function, plus rating information.

**RECEIVING, INSPECTION AND HANDLING** – Describes procedures for receiving, unpacking, inspecting, handling, lifting and moving the contactors.

**INSTALLATION** – Provides information on installing the contactor.

**PRE-ENERGIZATION CHECK** – Provides a checklist for preparing the equipment for energization.

**OPERATION** – Provides information on operation of the contactor, circuit diagrams, operating sequence description.

**MAINTENANCE** – Lists the basic maintenance procedures for this equipment necessary for safe and reliable operation.

**DISPOSAL** – Lists procedures for the safe disposal of the equipment when the service life has expired.

**STORAGE** – Provides guidelines for storing new equipment for an extended period of time.

**SPECIFICATIONS** – Covers ratings and other specifications of the contactor.

**WARRANTY AND LIMITATION OF LIABILITY** – Details Toshiba International Corporation's standard warranty terms.

COMPONENTS

The Toshiba CV-1JB and CV-1KA vacuum contactors described in this manual are suitable for use on systems of 1.5kV, 600A and 1.5kV, 720A respectively.

Arc interruption is accomplished inside sealed vacuum interrupters mounted on track-resistant insulators. Vacuum interrupters use low-surge contact materials, which exhibit low current chopping levels reducing switching overvoltage.

Front view (Figure 1):
1. Insulation frame
2. Vacuum Interrupter
3. Primary terminal
4. Flexible conductor

Side view (Figure 2):
1. Drive unit
2. Auxiliary switch
3. Shaft

Rear view (Figure 3):
1. Closing coil
2. Opening spring
3. Armature
4. Terminal block

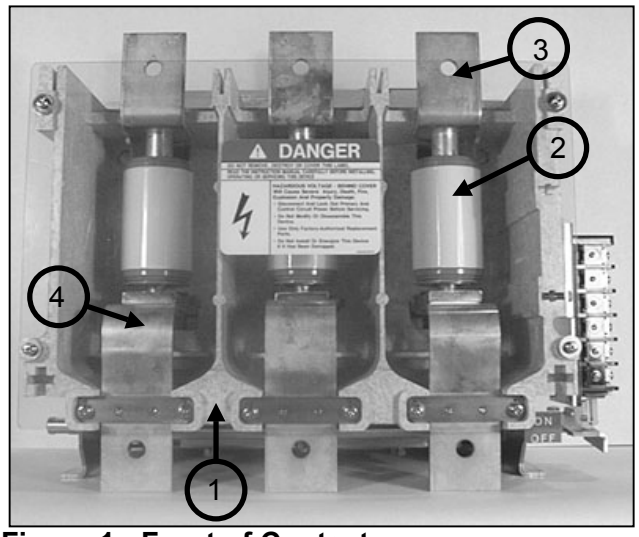

**Figure 1 - Front of Contactor**

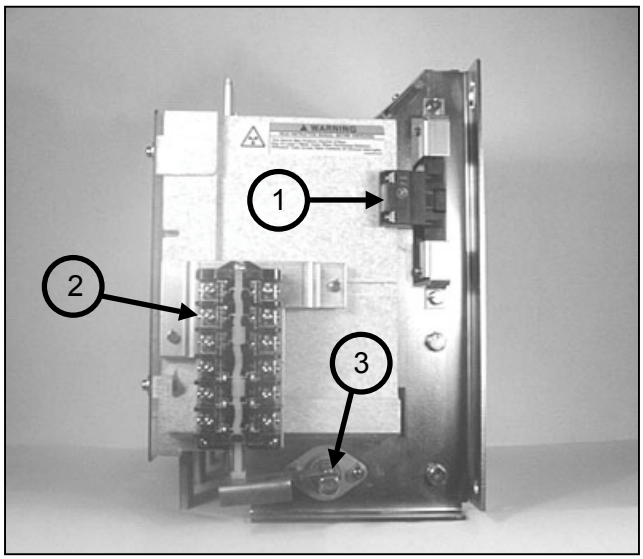

**Figure 2 - Right Side of Contactor**

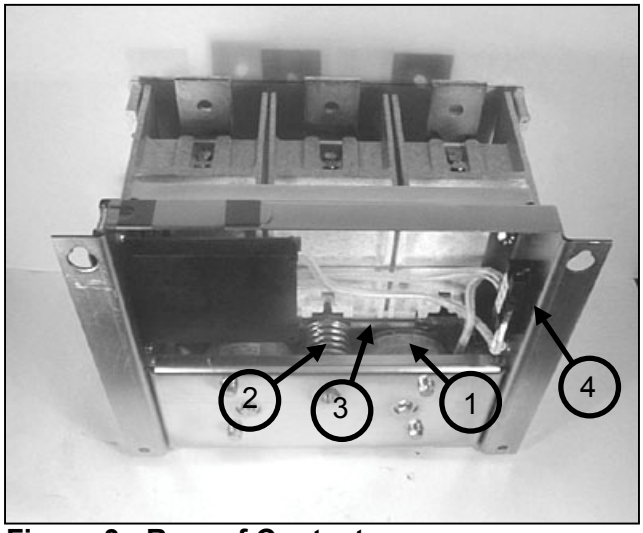

**Figure 3 - Rear of Contactor**

**INDICATORS AND CONTROLS**

The following indicator is provided:

On-Off Indicator - Indicates if the contactor is OFF (Green) or ON (Red). When the indicator reads OFF, the main contacts of the contactor are open. When the indication is ON, the main contacts are closed. See Figure 4.

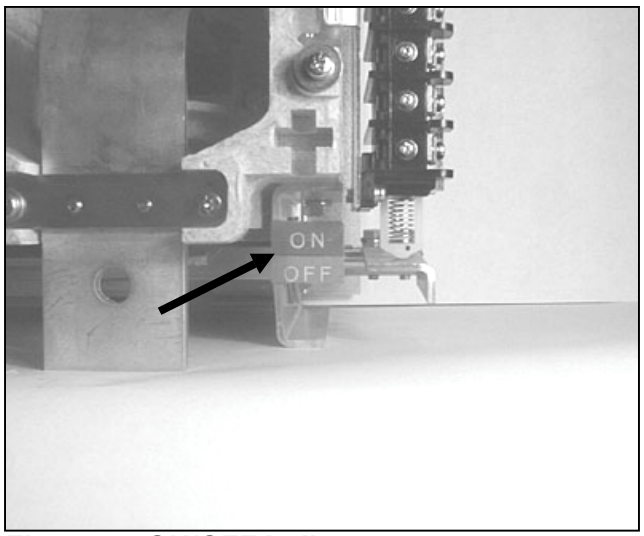


**Figure 4 - ON/OFF Indicator**

## RECEIVING AND UNPACKING

The contactor units are subjected to factory production testing prior to being packed and shipped.

## ACCEPTANCE INSPECTION

Confirm that the contactor is complete, correct as specified and undamaged from shipment and handling.

Upon receipt of the equipment, do the following:

1. Make an immediate inspection for damage that might have occurred during shipment. If damage is discovered, it should be noted with the carrier prior to accepting the shipment, if possible.
2. Carefully unpack the equipment sufficiently to check for missing parts or concealed damage.
3. Check for the presence of accessories that are shipped with the contactor:

    - Contactor wear gauge (Figure 5).

4. Keep the contactor upright.

**⚠CAUTION** **Never lay the contactor on its side or upside down. This may cause damage.**

File a claim with the carrier for any damaged or missing items and immediately notify the nearest Toshiba representative.

**⚠WARNING** **Do not install or energize equipment that has been damaged. Damaged equipment can fail during operation, resulting in fire and explosion.**

## HANDLING AND MOVING

Care and caution should be used when handling the contactor to avoid damage to the equipment and personal injury. Always keep the equipment in a generally upright position.

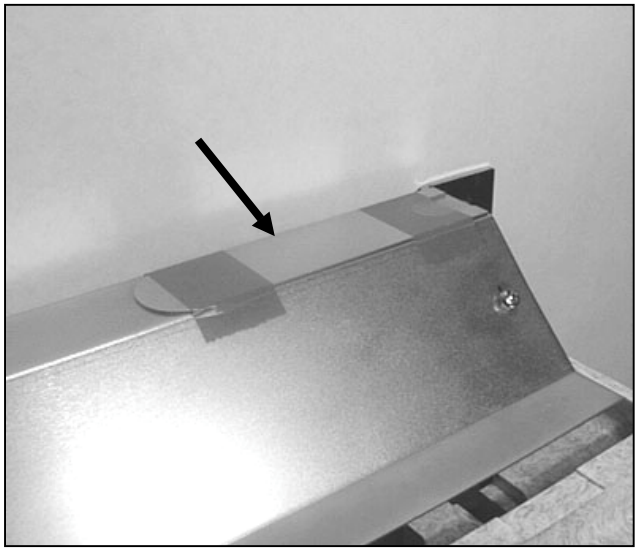

**Figure 5 - Location of Wear Gauge**

## AMBIENT CONDITIONS

**⚠WARNING** **Do not install this equipment in areas where unusual service conditions exist. Using this equipment in other than usual service conditions can result in equipment failure.**

Toshiba CV-1JB and CV-1KA contactors are intended for use in usual service conditions as defined in NEMA ICS 1. The temperature of the cooling air (ambient air temperature) surrounding the contactor should be between the limits of -5°C (23°F) and +40°C (104°F). The altitude of the equipment installation should not exceed 3300-ft (1000 m).

In particular, avoid the following installation conditions:

- Excessive dust
- Corrosive gases
- Extreme variations in temperature
- Very high or low humidity
- Vibrations
- Inclined locations

If there is a chance that condensation can occur at the installation location, a space heater should be installed inside the contactor enclosure.

**NOTE:** Temperature, altitude or other conditions outside of the usual limits may require derating or other special equipment. Contact your nearest Toshiba representative for additional information.

## MOUNTING THE CONTACTOR

The contactor is designed to mount to a flat, vertical surface. If there are any noticeable gaps between the contactor and the mounting surface, fill them in using flat washers as spacers.

Fasten the contactor using four (4) M8 hex head bolts. The tightening torque should be 120-150 kgf-cm (9-11 ft-lb). See Table 1 for tightening torque specifications.

## MAIN CIRCUIT CABLE CONNECTIONS

Route cables that connect to the contactor to avoid interference with sharp edges and moving parts. Observe minimum bending radius for the type of cable used.

Power cables should be braced and/or laced to withstand short-circuit forces wherever such cables are unsupported. Power cables should be adequately sized to carry the maximum continuous current in accordance with NEC requirements and should have an adequate voltage rating. Cables should be dressed and terminated as appropriate to the voltage class and cable manufacturer's recommendations.

Fasten the cables to the main circuit terminals. Use 35 mm Class 8.8 M10 or M12 hex head bolts, 2 flat washers, a lock washer and a nut. While securely preventing the nut from rotating with a wrench, torque the bolt to 250-315 kgf-cm (18-23 ft-lb) for M10 bolts or 450-565 kgf-cm (32-41 ft-lb) for M12 bolts.

**⚠CAUTION** **Use two wrenches to torque the connection to prevent applying excessive force to the terminal, which can damage the frame.**

## GROUND CONNECTIONS

The contactor must be grounded in accordance with the requirements of the National Electrical Code, Article 250 or applicable local standards.

**⚠WARNING** **Proper grounding connections must be made to the contactor before incoming power is applied.**

It is very important that the contactor be adequately grounded to protect the operator from injury in the event of short circuits or other abnormal occurrences and to ensure that the metal parts of the equipment, other than live parts, remain at ground potential.

The ground terminal is located on the left side of the contactor as shown in Figure 6. To make the ground connection, first remove the fastening M8 hex head bolt and crimp-on terminal (provided with the contactor) and crimp the terminal to the end of the ground wire.

The ground wire should be 8 AWG or larger. Then reattach the terminal using the same bolt previously removed and torque to 9-11 ft-lb (120-150 kgf-cm).

## CONTROL CIRCUIT CONNECTIONS

**⚠WARNING** **Hazardous Voltage. Turn off and lock out all primary and control circuit power sources prior to performing this pre-energization check. Applying the specified power to the drive unit will immediately activate the coils and close the contactor.**

Control circuit wiring is connected to the contactor by means of a drive unit (black plastic box) located on the right side frame (Figure 7). Either AC or DC supply voltage may be connected to the drive unit.

The standard operating voltage for the control circuit is 100-240V AC/DC. Figure 8 in the OPERATION section of this manual show the internal connections of the drive unit, closing coils, and auxiliary switch.

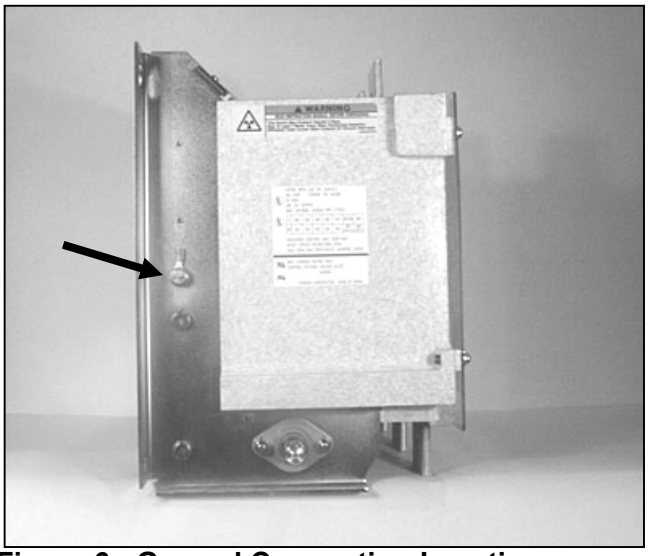

**Figure 6 - Ground Connection Location**

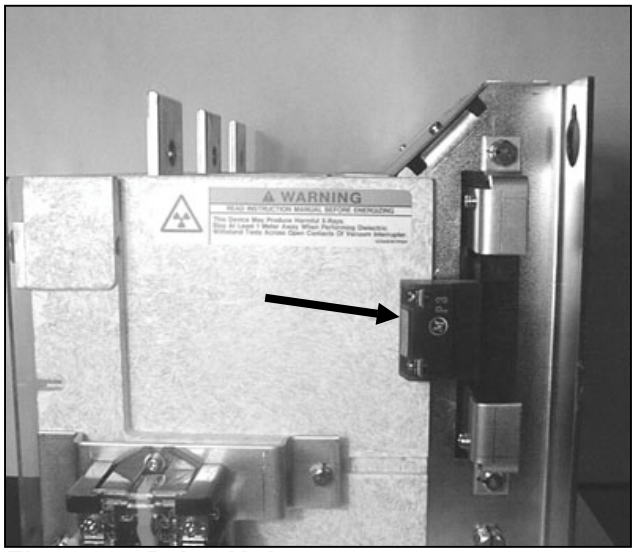


**Figure 7 - Drive Unit**

## GENERAL

**BEFORE ENERGIZING THE CONTACTOR** for the first time, follow the procedure below to verify that the equipment is properly installed and functional.

**⚠DANGER** **Hazardous Voltage. Turn off and lock out all primary and control circuit power sources prior to performing this pre-energization check.**

**⚠WARNING** **Do not operate this equipment until a complete safety inspection has been made.**

**⚠WARNING** **Do not energize damaged equipment that has not been repaired or verified.**

**⚠WARNING** **Do not remove, cover or destroy any safety signs.**

**⚠WARNING** **Do not operate this equipment if any panels or covers have been removed.**

- All blocks or other temporary braces used for shipment must be removed.
- Install all panels, guards, and covers if removed.
- Check for any loose connections and confirm that all wiring is correct per wiring diagrams.
- A supply of spare parts should be established.
- Instruction manuals and diagrams should be collected and filed.

## ELECTRICAL CHECKS

**⚠WARNING** **Electrical shock hazard. Do not touch energized components during a test using auxiliary power.**

An electrical insulation resistance test should be performed to verify that the contactor and associated field wiring are free from short circuits and grounds. Refer to the MAINTENANCE Section of this manual for additional information.

**⚠WARNING** **Hazardous voltages are present during dielectric testing which can result in serious injury or death. High potential tests should be performed only by qualified personnel.**

**MOVING THE CONTACTOR FROM THE OFF TO THE ON POSITION**

TO MOVE THE CONTACTOR TO THE ON POSITION:

1. Turn ON circuit control power to move the contactor to the ON position
2. Verify that the position indicator reads ON (Red).

**MOVING THE CIRCUIT BREAKER FROM THE ON TO THE OFF POSITION**

TO MOVE THE CIRCUIT BREAKER TO THE OFF POSITION:

1. Turn OFF circuit control power to move the contactor to the OFF position
2. Verify that the position indicator reads OFF (Green).

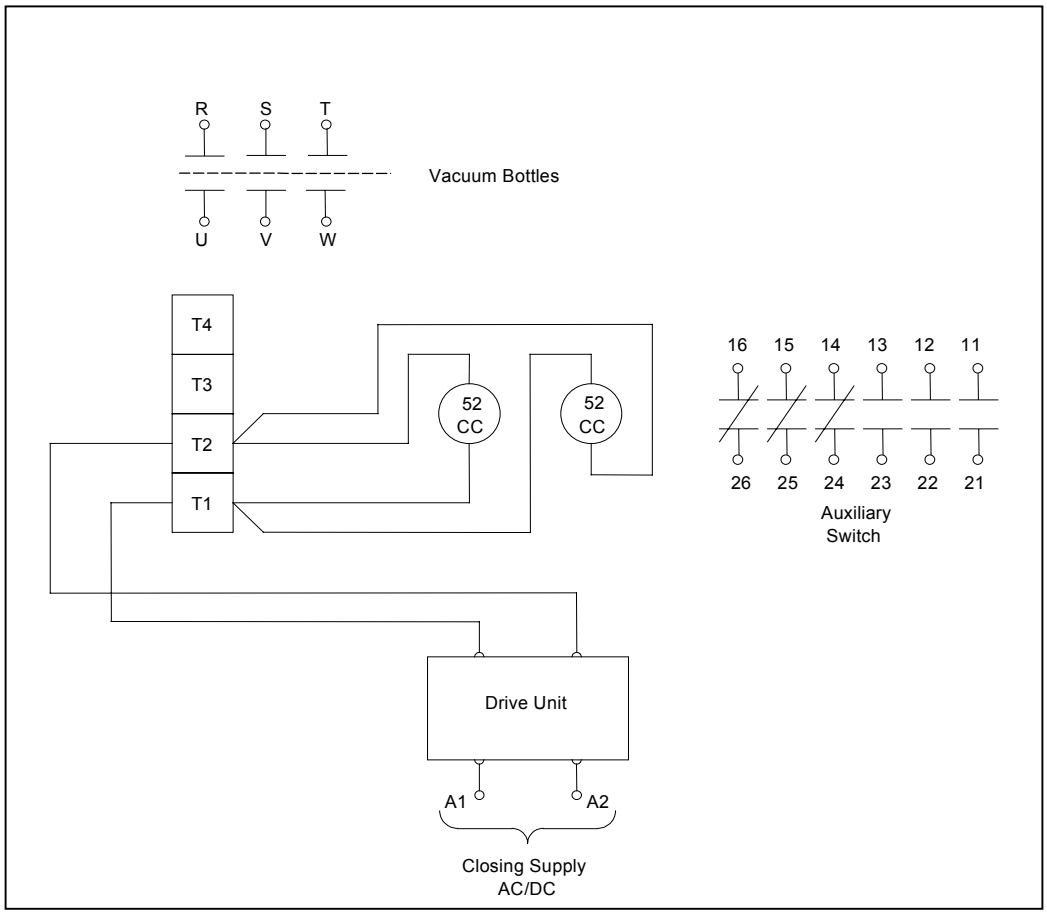


LEGEND

52 CC …. Closing Coil
T1-T4 ….. Terminal Block
A1-A2…... Closing Supply AC/DC

**Figure 8 – Internal Connection of the Normally Energized Type**

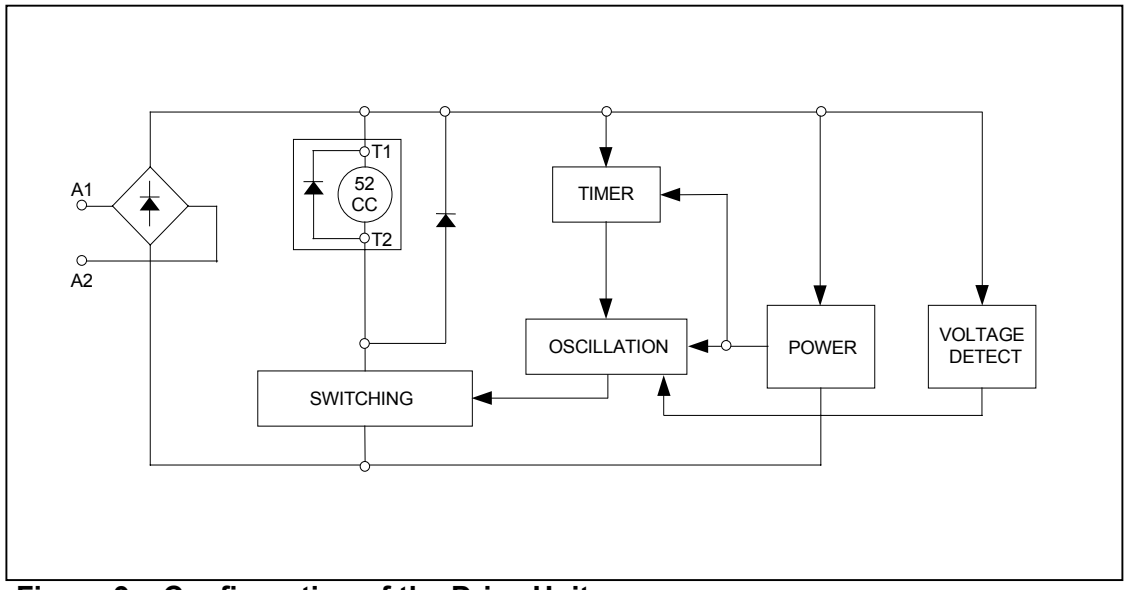


LEGEND

52 CC …. Closing Coil
T1-T2 ….. Terminal Block
A1-A2…... Closing Supply AC/DC

**Figure 9 – Configuration of the Drive Unit**

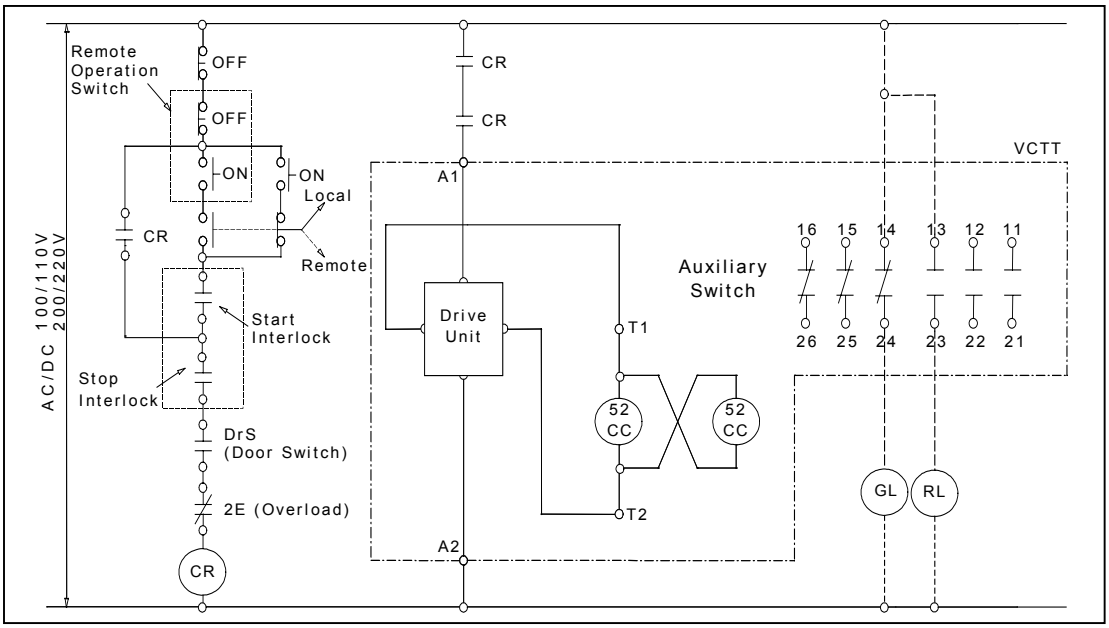


LEGEND

52 CC .... Closing Coil
T1-T2 ..... Terminal Block
GL ..... Green Light
RL ..... Red Light
CR..... Control Relay
A1-A2..... Closing Supply AC/DC

**Figure 10 - Standard Operation Circuit of the Normally Energized Type.**

## MAINTENANCE PROGRAM

In order to ensure continued reliable and safe operation of the equipment, a program of periodic maintenance must be established. Operating and environmental conditions will usually dictate the frequency of inspection required. NFPA Publication 70B "Electrical Equipment Maintenance" may be used as a guide for setting up the maintenance program.

**⚠DANGER** **Contact with energized components can cause severe injury, death and property damage. Turn off and lock out primary and control circuit power before servicing.**

**⚠WARNING** **Improper maintenance can cause severe injury, death and property damage. Only qualified and authorized persons are to install, operate or service this equipment.**

**⚠WARNING** **Grease is conductive. Do not allow grease or any other substances to contaminate insulating materials. Contaminated insulators can allow a short-circuit or ground fault to occur.**

**NOTE:** Refer to the SAFETY section of this manual for important information.

## MAINTENANCE RECORD

Keep a permanent record of all maintenance work. At a minimum, this record should include information on:

1. Items inspected
2. Reports of any testing
3. Equipment condition
4. Corrective actions or adjustments
5. Date of work
6. Comments

The degree of detail of the record will depend somewhat on the operating conditions.

## SERVICING EQUIPMENT

For your safety, turn off and lock out main and control circuit power before servicing the contactor. Certain minimum safety procedures must be followed:

1. Only **qualified personnel** should attempt this service.

2. **Never** perform service on or next to exposed components energized with line voltage.

**⚠WARNING** **Failure to adhere to these safety procedures can result in severe injury, death and property damage.**

**RECOMMENDED INSPECTION AND MAINTENANCE TYPES**

**NOTE:** Refer to the SAFETY section of this manual for important information.

1. Acceptance Inspection

   This inspection confirms that the contactor is complete, correct as specified and undamaged from shipment. The procedure for this inspection is outlined in the RECEIVING, INSPECTION AND HANDLING section of this manual.

2. Patrol Inspection

   Inspection is made of the condition of the contactor while it is energized. Check that no unusual sounds or smells exist externally. Check for any abnormal discoloration due to overheating. Inspect for signs of damage to the insulation frame, OPEN/CLOSE indicator and other components.

   Inspection Frequency: Once every 6 months

3. Periodic Inspection

   Inspection is performed with the contactor de-energized. The lubrication of sliding and rotating parts is checked and the mechanism is lubricated if needed.

   Inspection Frequency: Once every 1-2 years or every 20,000 operations (normal).

**NOTE:** Refer to Table 2 for the schedule of Periodic Inspections.

4. Unscheduled Inspection

   Inspections are implemented as required.

   Inspection Frequency: As needed

**NOTE:** The inspection frequency and points to be inspected may vary from the above recommendations depending on the status of use, frequency of switching and other factors.

**Table 1 - Tightening Torque**

| Screw Nominal Diameter | Tightening Torque |
|---|---|
| M4 | 15-20 kgf-cm (13-17 in-lb) |
| M5 | 30-40 kgf-cm (26-34 in-lb) |
| M6 | 50-65 kgf-cm (43-56 in-lb) |
| M8 | 120-150 kgf-cm (9-11 ft-lb) |
| M10 | 250-315 kgf-cm (18-23 ft-lb) |
| M12 | 450-565 kgf-cm (32-41 ft-lb) |

**Table 2 - Check Points for Periodic Inspection**

| Check Point | Check Item | Check Method | Criteria | Disposition |
|---|---|---|---|---|
| Operating Mechanism | Loose bolts, nuts or screws | Tighten using screwdriver or wrench. | Make sure all bolts, nuts and screws are tight. | Tighten if loose. See Table 1 for tightening torque specifications. |
| | Dust or foreign matter inside | Visual inspection. | The contactor should be clean and contain no foreign matter. | Wipe with a clean dry cloth. |
| | Electro-magnets | Visual inspection. | Check for rust, discoloration, wear, or loose mountings. | Wipe with a clean dry cloth. |
| | Closing coil | Visual inspection. | Check for discoloration, and burned parts. | Wipe with a clean dry cloth. |
| | Spring | Visual inspection. | Check for rust, deformation, discoloration, or damage. | Wipe with clean dry cloth. Lubricate if necessary. |
| | Smooth operation | Visual inspection or touch. Check lubrication. | Make sure moving parts operate smoothly. | Apply a small amount of lubrication. |
| Main Circuit | Terminals and movable conductors. | Visual inspection. Tighten using screwdriver or wrench. | Make sure there is no discoloration or loose fasteners. | Check the cause and repair. Tighten connections to contactor. See (Table 1) for tightening torque specifications. |
| | Loose bolts, nuts or screws | Tighten using a wrench. | Make sure all bolts, nuts and screws are tight. | See Table 1 for tightening torque specifications. |
| | Vacuum contact wear. | See Electrical Service Life (Page 23). | Check contact wear and wipe. | Replace vacuum interrupter. |
| | Vacuum level. | Apply 10kV AC for 1 minute. | Check vacuum level by withstand voltage test. | If breakdown occurs, contact Toshiba. |

**Table 2 – Check Points for Periodic Inspection (cont.)**

| Check Point | Check Item | Check Method | Criteria | What to do |
|---|---|---|---|---|
| Main Circuit | Dust on surface of vacuum interrupter | Visual inspection. | Make sure there is no dust on the surface. | Wipe with a clean, dry cloth. |
| Insulation Frame and Flanges | Dust, foreign matter or damage | Visual inspection. | Make sure there is no dust, foreign matter or breakage. | Wipe with a clean, dry cloth. If damaged, contact Toshiba. |
| Control Circuits | Auxiliary Switch | See Table 3. | Contact wear and wipe. Make sure there is no dust. | Replace if wear or damage is excessive. See Table 1 for tightening torque specifications |
| | Drive unit | Visual inspection. | Check for overheating and discoloration. | Replace if damaged. |
| | Wiring | Visual inspection. Tighten using a screwdriver. | Check for discoloration and tightness. | Repair if disconnected. Tighten if loose. See Table 1 for tightening torque specifications. |
| Insulation Resistance Measure-ment | Resistance from main circuit to ground | Measure insulation resistance between phases, between electrodes, and between circuits and ground. Megger test at 1000V. | Resistance should be 50MΩ or greater. | If the insulation resistance is low, wipe off the vacuum interrupter and other insulation surfaces with a clean dry cloth and then repeat the test. If necessary, replace faulty parts. |
| | Resistance from control circuits to ground | Measure insulation resistance between circuits and ground. Megger test at 500V. | Resistance should be 1MΩ or greater. | |

**Table 2 – Check Points for Periodic Inspection (cont.)**

| Check Point | Check Item | Check Method | Criteria | What to do |
|---|---|---|---|---|
| Dielectric Strength | Measure main circuit | Measure dielectric strength between phases and between circuits and ground. | 10kV AC or 14kV DC for 1 minute. | If breakdown occurs, contact Toshiba. |
| Open/Close Operation | --- | Perform open/close operation by electric operation test to confirm the correct operation. | --- | If not normal, check and repair. If necessary, replace faulty parts. |

**Table 3 - Gap/Wipe Standard Values (contactor in new condition).**

| Parts | | Gap | Wipe | Allowable Wear |
|---|---|---|---|---|
| Vacuum Interrupter | Normally energized type | 0.091-0.098 in. (2.3-2.5 mm) | 0.091-0.102 in. (2.3-2.6 mm) | 0.051 in. (1.3 mm) |
| Auxiliary Switch | a-contact | 0.157±0.016 in. (4±0.4 mm) | 0.118±0.012 in. (3±0.3 mm) | --- |
| | b-contact | 0.157±0.016 in. (4±0.4 mm) | 0.118±0.012 in. (3±0.3 mm) | |
| | Delayed b-contact | 0.098±0.012 in. (2.5±0.3 mm) | 0.177±0.020 in. (4.5±0.5 mm) | |

**VACUUM CHECK**

A sufficient level of vacuum is necessary for proper performance of the vacuum interrupters. Although vacuum leaks are rare, the vacuum integrity should be checked periodically. The relationship between dielectric breakdown voltage of the contact gap and internal vacuum interrupter pressure has been found to be generally predictable. Therefore, vacuum interrupter integrity is checked by performing a high potential test across the open gap of the interrupter.

TEST EQUIPMENT:

Toshiba offers a compact vacuum checker (Type CI35-1D, Figure 11) which enables a quick and easy check on vacuum interrupter internal pressure. Alternatively, any commercially available AC high potential tester may be used which is capable of delivering at least 25 milliamperes at 10 kV for a period of one minute.

PRECAUTIONS:

Applying abnormally high voltage across a pair of contacts in vacuum may produce X-rays. The radiation may increase with the increase in voltage and/or decrease in contact spacing. X-radiation produced during this test with recommended voltage and normal contact spacing is extremely low and well below the maximum permitted by standards. As an additional safety measure, however, it is recommended that all personnel keep at least 1 meter (3.3 ft) away from the vacuum circuit breaker while this test is performed.

**⚠WARNING** **Radiation exposure hazard. X-rays may cause illness or injury. Stay at least 1 meter (3.3 ft) away from the circuit breaker during the vacuum check test.**

**⚠WARNING** **Hazardous voltages are present during dielectric testing which can result in severe injury or death. Only qualified personnel should conduct this testing.**

TEST PROCEDURE:

1. The contactor should be disconnected from the main circuit and be in the OFF position.

2. Connect all the line side primary terminals together and to the output of the vacuum checker or AC hi-pot machine. Connect all the load side primary terminals together and to the ground terminal of the vacuum checker or AC hi-pot machine.

3. Increase the voltage from zero to 10kV AC at a rate of approximately 1kV per second. Hold the voltage at this value for 1 minute and observe the current drawn by the interrupter. See Figure 12.

4. Decrease the voltage back to zero.

**Figure 11 - Toshiba Portable Vacuum Checker**

CRITERIA:

1. If a current flow above 5 milliamperes is observed or if breakdown occurs, one or more of the interrupters has insufficient vacuum and must be replaced.

   *Exception:* If the current exceeds 5 milliamperes the first time the voltage is brought up, reduce the voltage to zero and increase it again. It may be necessary to repeat this procedure a few times.

2. If the contactor fails to meet criteria 1, then repeat the test on each pole separately to identify the damaged interrupter or interrupters.

3. If the voltage can be held for 1 minute and the current flow does not exceed 5 milliamperes, the interrupter has a sufficient vacuum level.

After the test is complete, discharge any residual static charge from the primary terminals of the circuit breaker.

If a vacuum checker or AC hi-pot tester is not available, a DC hi potential test may be conducted. If a DC test is conducted, the test voltage must be increased to 14kV DC. The test duration for DC tests and the criteria for acceptance remain the same as for AC tests.

**⚠WARNING** **Do not use DC hi-pot testers which employ unfiltered half-wave rectifiers. The peak voltages produced by these testers may exceed the recommended value of 14kV. This can result in the production of harmful X-rays and may invalidate the test results.**

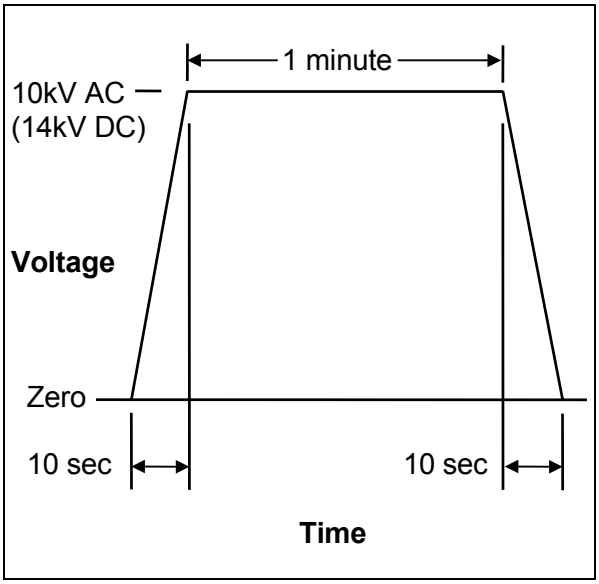


**Figure 12 - Application of Test Voltage for Vacuum Check**

## ELECTRICAL SERVICE LIFE

The electrical service life of the vacuum interrupter is defined by the electrode wear and the number of open/close operations (mechanical life).

To determine electrode wear, measure the distance between the lever and washer in the closed (ON) state, as shown in Figure 13. This dimension is called the “wipe”. If the 1.0mm contact wear gauge cannot be inserted, then the end of the service life has been reached. The maximum number of open/close operations is 500,000 regardless of the magnitudes of the currents interrupted. Contact Toshiba for information regarding replacement of the vacuum interrupters.

The drive unit and the closing coils also have an electrical service life of 500,000 operations. As a result, these parts should be replaced around 500,000 operations.

## MECHANICAL SERVICE LIFE

The normally energized type has a mechanical service life of 2.5 million operations. The mechanical service life of the vacuum interrupters is 500,000 operations.

For the components listed in Table 4, replacement or detailed inspection and cleaning are recommended after the indicated number of operations.

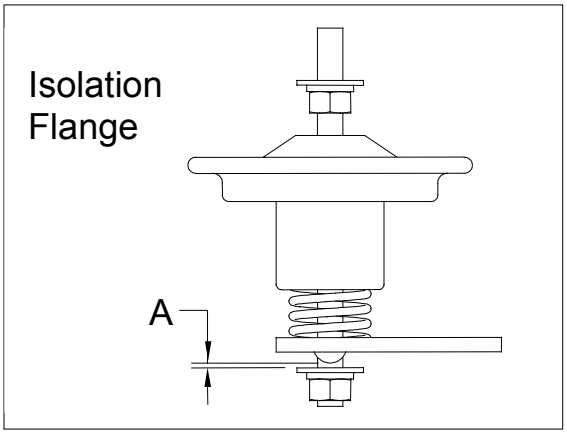


**Figure 13 - Gap Measurement**

**Table 4 - Recommended Part Replacement Intervals**

| Part Name | Number of Operations for Replacement |
|---|---|
| Vacuum Interrupter | 500,000 |
| Auxiliary Switch | 200,000 |
| Moveable Core | Detailed inspection and cleaning every 500,000 operations. |
| Stationary Core | Detailed inspection and cleaning every 500,000 operations. |
| Closing Coil | 500,000 |
| Flexible Conductor | 500,000 |

## SERVICE LIFE – CAPACITOR SWITCHING

Switching of the capacitor loads produces severe conditions for contactors, such as high frequency inrush current and phase-to-phase recovery voltage more than twice the normal voltage.

The criterion for the maximum number of the capacitor current switching operations is shown in Figure 14. The vacuum interrupter should be replaced when the number of switching operations in the graph is reached.

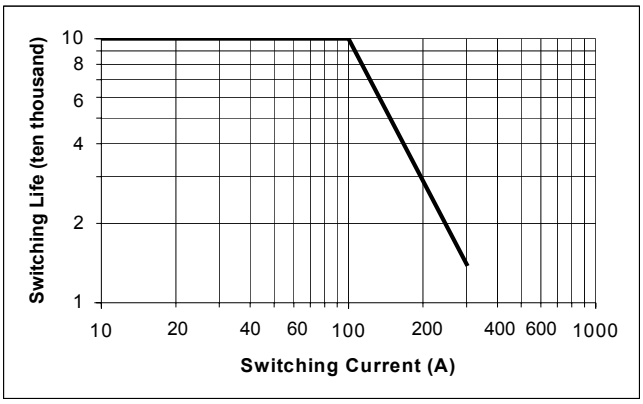


**Figure 14 - Capacitor Switching Life**

## STORAGE

If the circuit breaker is to be stored for any length of time prior to installation, the following precautions should be taken.

1. The original packing should be restored, if possible.
2. Do not subject the equipment to moisture or sunrays. Store in cool, clean, and dry location.
3. Place a dust cover over the contactor packaging to protect against dirt and moisture.
4. Store in an upright position.

## INSPECTION DURING STORAGE

Routine scheduled inspection is necessary if storage is for an extended period. The unit should be checked for condensation, moisture, corrosion, and vermin.

Prior to installation, the contactor should be carefully examined for evidence of physical damage, corrosion, or other deterioration. Refer to the PRE-ENERGIZATION Section of this manual.

The MAINTENANCE section of this manual describes various types of inspections recommended for this contactor during the operation period.

## DISPOSAL

Contact your state environmental agency for details on disposal of electrical components and packaging in your particular area.

**Table 5 - Ratings**

| Items | | CV-1JBU | CV-1KAU |
|---|---|---|---|
| Rated Insulation Voltage | kV | 1.5 | |
| Rated Operation Voltage | V | 208-1500 | |
| Rated Operational Current | A | 600 | 720 |
| Rated Frequency | Hz | 50/60 | |
| Rated Making Current | kA | 6.0<br>(close 100 times) | 7.2<br>(close 100 times) |
| Rated Breaking Current | kA | 4.8<br>(close-open 25 times) | 5.76<br>(close-open 25 times) |
| Rated Insulation Level | kV | AC 10 Impulse 45 | AC 10 Impulse 30 |
| Rated Short-Time Current | kA | 9.0 – 1 sec.<br>3.6 – 30 sec. | 10.8 – 1 sec.<br>4.3 – 30 sec. |
| Method of Operation | | Non-latch | |
| Mechanical Operation | Million | 2.5 | |
| Electrical Operation | Million | 0.5 | |
| Operational Voltage | Standard | 100-240V AC/DC | |
| Auxiliary Switch | | 3 N.O. – 3 N.C. | |
| Switching Frequency | Times/h | 1200 | |

Toshiba International Corporation ("Company") warrants that all equipment and parts described herein will be free from defects in materials and workmanship. THIS WARRANTY WILL EXPIRE EIGHTEEN (18) MONTHS AFTER THE DATE ON WHICH SUCH EQUIPMENT AND PARTS (EXCLUDING REPAIRED OR REPLACEMENT EQUIPMENT AND PARTS FURNISHED PURSUANT TO THIS WARRANTY) ARE SHIPPED BY THE COMPANY TO THE INITIAL PURCHASER OR TWELVE (12) MONTHS AFTER SUCH EQUIPMENT AND PARTS (EXCLUDING REPAIRED OR REPLACEMENT EQUIPMENT AND PARTS FURNISHED PURSUANT TO THIS WARRANTY) ARE FIRST PLACED IN OPERATION, WHICHEVER PERIOD FIRST EXPIRES.

The Company will, at its option, repair or replace such equipment or part which is defective under the terms of the foregoing warranty, free of charge; provided the purchaser (1) promptly notifies the Company in writing of such defect, and (2) furnishes the Company satisfactory proof thereof, and (3) establishes that the equipment or part has been properly installed, maintained and operated within the limits of rated capacity and normal usage and in accordance with this manual, and (4) if requested by the Company, returns the defective equipment or part to the Company and pays all expenses incurred in connection with such return. The repaired or replacement equipment or part will be delivered, free of charge, to the purchaser F.O.B. the Company's warehouse or, at the Company's option, F.O.B. a Company authorized service shop, not loaded on truck or other carrier. The purchaser will pay the costs applicable to the equipment or part following such delivery, including, without limitation, all handling, transportation, assembly, insurance, testing and inspection charges.

THE FOREGOING OBLIGATION TO REPAIR OR REPLACE EQUIPMENT PARTS SHALL BE THE SOLE AND EXCLUSIVE REMEDY OF THE PURCHASER, ITS CUSTOMERS AND USERS OF THE EQUIPMENT AND PARTS FOR BREACH OF THE FOREGOING WARRANTY. THE COMPANY WILL HAVE NO OBLIGATIONS TO DISASSEMBLE ANY EQUIPMENT OR PART WHICH IS DEFECTIVE WITHIN THE TERMS OF THE ABOVE WARRANTY OR TO INSTALL ANY REPAIRED OR REPLACEMENT PART OR EQUIPMENT OR TO PAY ANY COSTS INCURRED IN CONNECTION WITH ANY SUCH DISASSEMBLY OR INSTALLATION. THE COMPANY, TOSHIBA CORPORATION AND THEIR SUPPLIERS AND SUBCONTRACTORS HEREBY DISCLAIM ALL OTHER EXPRESS, STATUTORY AND IMPLIED WARRANTIES, INCLUDING, WITHOUT LIMITATION, ALL EQUIPMENT AND PARTS FURNISHED PURSUANT TO THE FOREGOING WARRANTY AND ALL IMPLIED WARRANTIES OF MERCHANTABILITY.

The total liability of the Company, Toshiba Corporation and their suppliers and subcontractors for any loss, damage or claim, whether in contact, tort (including negligence and liability without fault), or otherwise, arising out of, connected with or resulting from the equipment and parts described in this manual or the performance or breach of any contract for the sale or supply of such equipment and parts, or from the design, manufacture, sale, delivery, resale, installation, technical direction or supervision of installation, inspection, testing, repair, replacement, operation, maintenance or use of any such equipment or part or any service relating thereto furnished by the Company shall not in any event exceed the price allocable to the equipment, part or service which gives claim, loss or damage. In no event, whether as a breach of contract or warranty, alleged negligence, liability without fault, or otherwise, shall the Company, Toshiba Corporation or their suppliers or subcontractors be liable for special or consequential damages, including, without limitation, loss or profits or revenue, loss of equipment described herein or any associated equipment, cost of capital, cost of substitute equipment or parts, facilities or services, down-time costs, labor costs or claims of customers of the purchaser for such damages.

TOSHIBA

**TOSHIBA INTERNATIONAL CORPORATION**
13131 W. Little York Road, Houston, TX 77041, U.S.A.
Tel: (713) 466-0277 Fax: (713) 466-8773