INSTRUCTIONS

for

the Installation, Care and Operation of Circuit Breakers and Accessories

FILE COPY

TYPE FP MOVABLE PORTION
MC-750A/1000A
RUPTAIR MAGNETIC
POWER CIRCUIT BREAKER
AND AUXILIARY EQUIPMENT

(STORED-ENERGY OPERATOR)

BOOK B.U.-6601

These instructions are not intended to cover all details or variations that may be encountered in connection with the installation, operation, and maintenance of this equipment.
Should additional information be desired contact the Allis-Chalmers Mfg. Company.

ALLIS-CHALMERS MFG. CO.
BOSTON WORKS · BOSTON · MASS.

ALLIS-CHALMERS MANUFACTURING COMPANY

TABLE OF CONTENTS
FOR
INSTRUCTION BOOK BXL-6601

CONTENTS	SECTION NO.
Cautions	Special--S
Part 1 - Introduction	
General	1.1
Proper Care is Essential to Good Service	1.2
Inspection and Shipping	1.3
Receipt	1.4
Storage	1.5
Remove Shipping Supports	1.6
Handling	1.7
Pre-Installation Service	1.8
Part 2 - Installation	
General	2.1
Remove Shipping Braces	2.2
Prepare Breaker for Inspection	2.3
Inspect and Check Breaker	2.4
Install Barrier Stacks	2.5
Insertion Mechanism	2.6
Grounding Contacts	2.7
Mechanical Interlocks	2.8
Positions in Cubicle	2.9
Operate in Test Position	2.10
Part 3 - Operation of Stored-Energy Closer	
General	3.1
Charging the Springs	3.2
Closing the Breaker	3.3
Manually Slow Closing the Breaker	3.4
Part 4 - Adjustments	
General	4.1
Arm	4.2
Motor Actuation Switch	4.3
Motor Cutoff Switch	4.4
Closing Springs	4.5
Trip Latch Roll	4.6
Trip Latch Bite	4.7
Main Toggle Roll	4.8
Closing Spring Latch Bite	4.9
Toggle Rolls	4.10
Auxiliary Switch	4.11
Interlock Plunger	4.12
Trip Solenoid	4.13
Contact Alignment and Stroke	4.14

CONTENTS | SECTION NO.

Part 4 - Adjustments (Cont'd.)

Adjustment for Contact Alignment	4.15
Adjustment for Stroke	4.16
Contact Lead	4.17

Part 5 - Maintenance

General	5.1
Contacts	5.2
Barrier Stacks	5.3
Breaker Timing	5.4
Lubrication	5.5
Maintenance Guide	5.6

Part 6 - Replacement Parts

How to Order	6.1
Recommend Spare Parts List	6.2
Replacing Parts	6.3
Phase Barriers	6.3a
Barrier Stacks	6.3b

ALLIS-CHALMERS MANUFACTURING COMPANY

ILLUSTRATIONS FOR
MAGNETIC BREAKER AND AUXILIARY EQUIPMENT

FIG. NO.	DESCRIPTION
1	TYPICAL STORED-ENERGY CLOSER
11	TYPICAL AUXILIARY SWITCH
21	TYPICAL MAGNETIC BREAKER ASSEMBLY
23	TYPICAL STUD AND SUPPORT ASSEMBLY
24	TYPICAL TOP BUSHING ASSEMBLY
25	TYPICAL LOWER BUSHING ASSEMBLY
26	TYPICAL ARC CHUTE

SECTION - S

CAUTIONS TO BE OBSERVED IN THE INSTALLATION, OPERATION, AND MAINTENANCE OF AIR MAGNETIC CIRCUIT BREAKERS

1. Examine breaker when delivered and report any SHIPPING DAMAGE.
2. Breaker shipped TIED in CLOSED POSITION.
3. Remove SHIPPING BRACES and FASTENINGS.
4. Hoist breaker only with SPREADER - avoid SHORT HITCHES.
5. Barrier stacks are shipped in SEPARATE CONTAINERS.
6. Store to keep breaker and barrier stacks CLEAN and DRY.
7. Operating power LEADS must be large enough to avoid VOLTAGE DROP.
8. Before adjusting or repairing, disconnect breaker from all sources of POWER and see that breaker is OPEN.
9. Unbolt MOVING END ARC RUNNER AND ARC CHUTE SUPPORT before tilting arc chutes.
10. Barrier stacks require SPECIAL HANDLING to avoid damage.
11. Avoid CLEANING FLUIDS detrimental to insulation or paint.
12. Keep GRAPHITE off insulation under penalty of replacement.
13. Do not dress Silver Contact surfaces.
14. Install barrier stacks before ENERGIZING breaker.
15. Do not close energized breaker with MANUAL CLOSING DEVICE except when equipped with stored-energy closer.
16. Reconnect MOVING END ARC RUNNER and ARC CHUTE SUPPORT before ENERGIZING breaker.
17. On breakers equipped with stored-energy closer PULL LANYARD only when CAM and FOLLOWER ROLL are engaged during a manually slow-close operation.

PART 1 - INTRODUCTION

1.1 GENERAL

Allis-Chalmers power circuit breakers are the products of advanced research and design. They are precision electrical equipment, tested to current ASA, EEI, and NEMA Standards, and manufactured in accordance with highest standards.

1.2 PROPER CARE IS ESSENTIAL TO GOOD SERVICE

The successful operation of this circuit breaker depends on proper installation and maintenance as a complement to quality design and fabrication.

The information and instructions included in this book are to aid you in installing and maintaining these units so that you will obtain the highly satisfactory service of which they are capable.

The following numbering system has been adopted for ready reference in this instruction book:

1.2 - Refers to Section #2 of Part 1

4-220 - Refers to item #220 on illustration marked Figure 4

Please pass this information along to your engineers, erection personnel, and servicemen who will then be better able to aid you in realizing the best service from this equipment.

1.3 INSPECTION AND SHIPPING

During assembly and when circuit breakers are completed, they are subjected to a series of tests and inspections. Packing is expertly done to assure maximum protection during shipment.

1.4 RECEIPT

Upon receipt of the circuit breaker remove all packing traces and examine the breaker and auxiliary equipment carefully to see that no damage has occurred during transit. If any injury is disclosed, a claim for damages should be filed at once with the transportation company and the Allis-Chalmers Manufacturing Company notified.

1.5 STORAGE

If the breaker cannot be set up immediately in its permanent location, and it is necessary to store the equipment, it should be kept in a clean dry place and protected from dust, the action of corrosive gases, from coal combustion products, etc., and from mechanical injury.

1.6 REMOVE SHIPPING SUPPORTS

This circuit breaker has been shipped locked in the closed position. Packing braces that were installed to hold moving parts stationary in transit, must be removed. Fastenings installed to hold moving components of auxiliaries in closed position during transit must be removed.

1.7 HANDLING

In moving a circuit breaker after shipping crates or supports have been removed, and in handling the breaker with a crane or hoist, hooks should be attached only to special supports provided for the purpose and a spreader used where necessary to prevent distortion of frame members. Avoid short hitches which could place too much strain on parts of the breaker such as bushings, insulating parts, fittings, etc., which are not designed primarily for structural strength.

1.8 PRE-INSTALLATION SERVICE

Circuit breakers are completely set up, adjusted, and tested at the factory. However, since there are possibilities that adjustments or fastenings may have become loosened during shipment, storage, and installation, they should be checked thoroughly and corrected where necessary as described hereinafter before energization. The breaker should be operated several times manually at first, and then electrically, prior to and after installation in position before the breaker is ready for service.

Bushings and other insulating parts should be clean and dry. All contact surfaces should be inspected to see if they are clean and smooth. (Do not dress silver surfaces.)

PART 2 - INSTALLATION

2.1 GENERAL

Although the circuit breaker was completely adjusted, tested and packed for maximum protection in transit, it is necessary that adequate steps be taken to prepare the unit for installation.

2.2 REMOVE SHIPPING BRACES

Breaker is shipped in closed position with closing springs discharged. Barrier stacks (21-25)* are shipped in separate containers. Remove all shipping braces and fastenings used to hold trip latch (1-9) and other moving parts of breaker and auxiliaries.

2.3 PREPARE BREAKER FOR INSPECTION

Prepare breaker for installation inspection and servicing outside of cubicle. Remove phase barriers (see Section 6.3a); remove screws (21-37) and screws (21-39) on all three phases; install arc chute lifter and tilt back arc chutes to expose interior of breaker (see photos).

2.4 INSPECT AND CHECK BREAKER

Examine for any moisture, dirt and other foreign material, which could impair optimum breaker performance.

Charge springs manually (see Section 3.2); manually slow close the breaker (see Section 3.4). Watch operation of operator linkages and contacts carefully. Contacts should mate properly but need not make at same time on all phases. Trip manually (21-43).

Manually operate breaker several times to check adjustments of switches (see Sections 4.3 and 4.4).

Operate breaker several times electrically to check for smooth operation.

2.5 INSTALL BARRIER STACKS

Lower arc chutes; remove arc chute lifter; replace screws (21-37) and screws (21-39) in all phases. Remove tubes (26-18) and deflectors (21-28) and (21-29) (see Section 6.3b). Install barrier stacks taking care that slotted refractory plate slips between arc runner and its guide (see Section 6.3b).

Replace tubes and deflectors. Note center deflector differs from outer ones (see Section 6.3b).

Replace barriers and panel springs.

*Numbering system is explained in Section 1.2

2.6 INSERTION MECHANISM

The breaker insertion mechanism should be checked and lubricated if necessary for proper operation to prevent jamming during insertion. The breaker should be moved into position so that it can be rolled straight into the cubicle with a minimum of friction on the wheels and guides in the cubicle.

2.7 GROUNDING CONTACTS

Check to see that grounding fingers (21-12) on bottom of breaker will make proper contact with stationary ground bar in cubicle. Check for proper grounding contact when breaker is moved into cubicle.

2.8 MECHANICAL INTERLOCKS

Test mechanical interlock plunger (21-18) and make sure that it operates freely and has no binds nor interference.

2.9 POSITIONS IN CUBICLE

Move the breaker into each of its three positions in the cubicle; disconnected position, test position, and operating position. Test to make sure that breaker can be closed electrically only in its test position and in its operating position. When a switchboard has more than one of this type of the same size and rating of circuit breaker, each circuit breaker should be tried in each of the three positions in several cubicles to assure interchangeability.

2.10 OPERATE IN TEST POSITION

The breaker should be operated several times electrically in its test position to see that all parts work correctly in final preparation for its operating position. Make sure that secondary contacts of breaker are in alignment with secondary contacts in the cubicle.

Move the breaker slowly to its operating position. Check alignment of all six breaker contacts for proper engagement with the cubicle primary studs. The alignment of breaker and cubicle primary contacts should be close enough so that the contact fingers on the breaker will mesh with the studs in the cubicle without jamming. In the operating position in its cubicle, the Allis-Chalmers RUPTAIR air magnetic circuit breaker is ready for energization and operation within its rating.

PART 3 - OPERATION OF STORED-ENERGY CLOSER

3.1 GENERAL

The stored-energy closer is an operator using compressed springs to close a circuit breaker. A motor compresses the springs through a gear reduction, cam and latching system. Energizing the spring release coil operates the latch to release the charged springs and close the breaker.

3.2 CHARGING THE SPRINGS

A motor and gear unit (1-48) rotates cam (1-34) which drives follower roll (1-35). Arm (1-2) rotates clockwise compressing closing springs (1-30). When springs are charged, latch (1-18) falls behind roll (1-54) holding the springs charged. When cam (1-34) clears the follower roll (1-35) only the latch (1-18) holds the springs charged, and the operator is ready to close the breaker.

A charging handle is furnished to charge the closing springs manually. Open the control power circuit and engage the charging handle with the coupling on the front of the motor (1-48). The springs are charged by a counterclockwise rotation of the handle. Full spring compression will be realized by an audible snap as roll (1-54) drops back on latch (1-18) when cam (1-34) clears follower roll (1-35). Rotate handle two additional turns to insure cam has sufficiently cleared follower roll. Remove handle.

3.3 CLOSING THE BREAKER

Energizing the spring release coil (solenoid)(1-50) rotates arm (1-20) and latch (1-18) releasing closing springs. The closing springs rotate arm (1-2) which drives roll (1-54) against roll (1-55) thereby closing breaker.

The breaker can be closed manually by pulling lanyard (21-42) which rotates arm (1-20) as above.

3.4 MANUALLY SLOW CLOSING THE BREAKER

Manually slow closing the breaker is accomplished by manually charging the springs as described in section 3.2 except that the charging handle is rotated only until the trip latch (1-9) drops in front of roll (1-56).

Check to see that cam (1-34) is engaged with follower roll (1-35). If cam has been rotated too far and clears follower roll, merely crank handle counterclockwise again until cam is engaged with follower roll.

3.4 (CONTINUED)

The breaker can now be closed by slowly turning charging handle clockwise while a second man is holding disengaged the ratchet and pawl (rear of breaker) located on cam shaft. If latch (1-18) is engaged with follower roll (1-35), it will be necessary to pull and hold lanyard during first two or three rotations (clockwise) of handle.

CAUTION: PULL LANYARD ONLY WHEN CAM (1-34) IS ENGAGED WITH FOLLOWER ROLL (1-35) DURING MANUAL SLOW CLOSE OF BREAKER.

The breaker is fully closed when arm (1-2) is against stop (1-16).

PART 4 - ADJUSTMENTS

4.1 GENERAL

The breaker has been completely set up, adjusted and tested at the factory. However, adjustments or fastenings may be changed or become loosened during shipment, storage or installation and should be checked and corrected, if necessary, before breaker is operated electrically. Manual operation of breaker should be used for preliminary operation to see that all parts are free and work smoothly. The bushings and other insulating parts should be inspected to see that they are clean and smooth. (Do not dress silver surfaces.) Removal of all phase barriers and removal or tilting of arc chute assemblies gives access to breaker for checking adjustments.

The paragraphs immediately following give the proper adjustments and methods of making same on the Allis-Chalmers RUPTAIR Air Magnetic Power Circuit Breaker. Adjustment values are all listed in Appendix B attached. Note reference method - Appendix B-1 indicates item #1 in Appendix B.

4.2 ARM (1-2)

Add or remove shims (1-10) so that when arm (1-2) is in discharged position, the clearance between follower roll (1-35) and the smallest radius of cam (1-34) is 1/8 ± 1/32.

4.3 MOTOR ACTUATION SWITCH

The motor actuation switch (not shown) is located behind the lower end of arm (1-2). The switch should open when tip of cam (1-34) is 10° to 15° above position shown in Figure 1. Proper adjustment is obtained as follows: With closing springs charged and latched, remove switch and screw one nut all the way down to base of stud. Insert switch in bracket; start second nut. Pull switch forward with second nut until contacts snap open. Turn second nut down an additional one-half turn. Tighten first nut against bracket to lock in position.

4.4 MOTOR CUTOFF SWITCH

The motor cutoff switch (not shown) is located below special cam adjacent to main cam (1-34). The switch should open when cam (1-34) is in position shown in Figure 1. Proper adjustment is made as follows: Position cam (1-34) as shown in Figure 1. Remove switch and install as described in Section 4.3.

4.5 CLOSING SPRINGS

With springs discharged there should be 3/8 ± 1/8 clearance between trunion (1-19) and spring washer. Adjustment is made by moving nuts (1-44).

4.6 TRIP LATCH ROLL

With springs charged and breaker open, clearance between trip latch (1-9) and roll (1-56) should be 1/32 ± 1/64. Adjustment is made by adjusting screw (1-7).

4.7 TRIP LATCH BITE

Roll (1-56) should engage trip latch (1-9) 5/32 ± 1/32 from bottom edge of latch face. Adjustment is made by screw (1-36).

4.8 MAIN TOGGLE ROLL

When breaker is in closed position with roll (1-55) against block (1-15), center of main toggle roll (1-55) should be 1/4 ± 1/16 behond line of centers of latch roll (1-56) and pin (1-3). Adjustment is made by adding or removing shims (1-8).

4.9 CLOSING SPRING LATCH BITE

Roll (1-54) should engage latch (1-18) 5/32 ± 1/32 from bottom edge of latch face. Adjustment is made by screw (1-42).

4.10 TOGGLE ROLLS

When closing springs are charged and breaker is open, the clearance between toggle rolls (1-54) and (1-55) should be 1/8 ± 1/32. Adjustment is made by changing effective length of piston in both dash pots (21-31). This is done by loosening locking nuts on rod ends (21-48) and turning pistons to desired length.

4.11 AUXILIARY SWITCH (FIG. 11)

The auxiliary switch, located at the rear of the breaker, has been adjusted at the factory and should not normally require further adjustment. However, before the breaker is placed in service a check should be made to see that the crank arm (11-10) throws approximately equal distances on either side of a vertical center line. The adjustment for throw of crank arm is made by positioning the clevis on the auxiliary switch connecting rod. After correct adjustment is made, make sure all fastenings and locknuts are secure. Each rotor (11-3) can be adjusted individually in steps of 15 degrees merely by pressing the contact to one side against the spring and rotating it within its insulated rotor housing until it snaps into the desired position. Any changes made on this switch should be done carefully.

4.12 INTERLOCK PLUNGER (FIG. 21)

The foot lever (21-20) operates the interlock plunger (21-18) as well as the trip latch, motor cutoff switch and closing spring latch. Depressing the lever opens the motor circuit, discharges the closing springs, trips the breaker and raises plunger (21-18) sufficiently to release the breaker allowing it to be moved in the cubicle. The interlock is in proper adjustment when the plunger (21-18) is 1-3/4 ± 1/16 above the floor, and causes tripping of breaker contacts when it is raised to not more than 2-1/16 above the floor. The latch tripping rod associated with the foot lever should be clear of the trip latch (1-9) by 1/32 to 1/16.

4.13 TRIP SOLENOID (1-49)

The trip pin should float freely on its spring and not have any binds. There should be 1/4 ± 1/32 clearance between trip pin and trip latch (1-9). Adjustment is made by adding or removing shims (1-45).

4.14 CONTACT ALIGNMENT AND STROKE

The contacts are an integral part of the bushing assemblies and are carefully aligned with the upper and lower bushings before shipment and no further adjustment should normally be necessary. Check for proper contact alignment and, at the same time, for moving contact stroke by checking dimension g, View "AA", Fig. 23, between contact finger (24-3) and plate (24-10), on each side of bushing, top and bottom of each phase separately. It is not necessary that contacts touch simultaneously on all three phases.

When this dimension is found to be 1/16 ± 1/64 at all four points in a phase, both the alignment of the contacts and the stroke of the moving contact of that phase are correct.

If this dimension is found to be different than 1/16 ± 1/64 but all four in any phase measure within 1/32 of each other, it is necessary to adjust the stroke of the moving contact of that phase (see Section 4.16). If this dimension is not within tolerance, and there is a difference of over 1/32 among the four measurements in a phase, it is necessary to first adjust the contact alignment (see Section 4.15), and then the stroke of the moving contact (see Section 4.16).

4.15 ADJUSTMENT FOR CONTACT ALIGNMENT

To adjust contact alignment, close and latch breaker. Loosen two screws (24-24) and two screws (24-25). Move top block (24-8) and bottom block (24-13) sidewise until dimension g, View "AA", Figure 23, is 1/16 ± 1/64. Refasten screws (24-24) and 24-25). Both the contact alignment and stroke will be in proper adjustment.

4.15 ADJUSTMENT FOR CONTACT ALIGNMENT (Cont.)

In the event that this exact dimension and tolerance cannot be obtained, move blocks (24-8) and (24-13) so that all four dimensions c in a phase are within 1/32 of each other. Contact alignment in this phase will then be proper adjustment.

Care must be exercised in adjusting contact alignment to retain blocks (24-8) and (24-13) firmly against stops on stud.

4.16 ADJUSTMENT FOR STROKE

This adjustment is accomplished by lengthening or shortening effective length of link (21-47) to bring dimension c, View "AA", Figure 23, to 1/16 ± 1/64. Open breaker; screw nuts on bottom of link (21-47) on or off stud as required to bring this dimension to within tolerance in all four measurements in the phase (see Section 4.14). Tighten both nuts before attempting to close breaker to check adjustment. The stroke should be adjusted in each phase individually.

4.17 CONTACT LEAD (Fig. 23)

Contact lead is adjusted on breakers in the factory and should normally not require further adjustment. It should, however, be checked on each phase separately and only with contact alignment on the phase in correct adjustment.

In order to prepare breaker for contact lead check and adjusting, be sure that breaker is open and disconnect the movable contact from operator link (21-47) by removing pin (21-46) and two spacers (21-45). Bring movable arcing contact (25-3) so that it just touches the stationary arcing contact (24-4) as shown in Fig. 23, View "AA", (Arcing Contacts Engaging). Measure dimension a, Figure 23, the shortest gap between the two tertiary contacts, and dimension b (View "AA", Figure 23), the shortest gap between the main contacts. Dimension a should be 5/32 +0, -1/32 and dimension b should be 3/16 +1/16, -1/32.

If the dimensions a and b are not correct, remove one roll pin from each plate (24-10), loosen eight screws (24-22). Insert a spacer 5/32 +0, -1/32 thick between the tertiary contacts, and apply a C-clamp bearing on rear of block (24-8) and front of movable contact (25-3). Tighten C-clamp to obtain dimensions b. With contacts held in this position, move two plates (24-10) back so that pins (24-16) are touching leading end of plate slots. Tighten eight screws (24-22) drill and insert pin to retain adjustment. Remove spacer, remove C-clamp, and reconnect movable contact to link (21-47).

PART 5 - MAINTENANCE

5.1 GENERAL

Safety of the operator and continuity of electric service of loads connected to circuit breakers are dependent upon proper operation of the breakers. In order to keep circuit breakers in proper order, it is recommended that a routine service inspection should be made at six month or 2000 operation intervals, whichever comes first. The actual service interval and the amount of servicing required will usually be determined by the particular conditions at the installation and will be influenced by such things as the number of operations, number of fault interruptions, cleanliness of the equipment and past experience with the equipment.

Servicing is usually intended to cover adjusting, cleaning, lubricating, tightening, inspection, test, etc. A permanent record is usually desirable and should list for each serial number the date, operation counter reading, general condition of equipment and work done by serviceman.

Be sure that the breaker and its mechanism is disconnected from all electric power and that the breaker is in the open position before any maintenance is attempted.

5.2 CONTACTS

Inspect all contacts frequently, depending on severity of service. Replace badly pitted or burned contacts before they are damaged to such an extent as to cause improper operation of the breaker.

5.3 BARRIER STACKS

The barrier stacks are fragile and should be handled carefully. The barrier stacks should be inspected for erosion of the plates in the areas of the slots. The stacks should be replaced when a milky glaze is observed on the full length of the edges of most of the slots. They should be likewise replaced if plates are broken or cracked. When cleaning the breaker and cubicle, inspect for pieces of barrier stack refractory material which would obviously indicate breakage.

5.4 BREAKER TIMING

Check the contact adjustment and breaker timing, also check adjustments of auxiliary equipment and see that it functions properly. A comparison of breaker timing at any period of maintenance with that taken when the breaker was new will immediately indicate a condition of maladjustment or friction should the timing vary more than 1/2 cycles on opening or 2 cycles on closing with the same coils.

5.5 LUBRICATION

Lubrication is of the utmost importance and a special effort should be made to assure that all moving parts are kept clean and properly lubricated at all times. The disconnect hinge joint and the solenoid armature are lubricated with microfine dry graphite. Graphite should be rubbed in well and all excess carefully removed.

CAUTION: GRAPHITE MUST BE KEPT OFF INSULATION UNDER PENALTY OF REPLACEMENT, AS IT CANNOT BE SATISFACTORILY REMOVED.

Bearing Pins and other moving parts should be lightly lubricated with a light film of "Aero Lubriplate" or equal. Needle Bearings will in general not require frequent lubrication, but care should be taken to prevent entrance of dirt and foreign material during maintenance work. Mating surfaces of main and arcing contacts should not be lubricated.

5.6 MAINTENANCE GUIDE

Check adjustments in Sections 4.2 through 4.5, inclusive, as well as Sections 4.13 and 4.14 at each routine inspection. The other adjustments are listed to assist repairing a malfunctioning breaker.

PART 6 - REPLACEMENT PARTS

6.1 HOW TO ORDER

When ordering replacement parts, it is very important to give complete information. This information should include:

(1) Breaker serial number

(2) Number of pieces required

(3) Reference number

(4) Instruction book number

(5) Description of part (Use instruction book descriptions where possible)

(6) Rated voltage of all motors, relays and coils ordered

(7) Rated amperes of all motors, relays and coils ordered

(8) Rated voltage of breaker

(9) Rated amperes of breaker

The breaker serial number is necessary to determine the correct identity of a part; without this serial number, Allis-Chalmers Mfg. Co. cannot be sure of the correct identity of the desired parts.

If any doubt exists as to the instruction book reference or the description a dimensional sketch of the desired part will help to properly identify it.

6.2 RECOMMENDED SPARE PARTS LIST (BWX-6601)

It is recommended that sufficient parts be carried in stock to enable operators of circuit breakers to replace without delay any worn, broken, or damaged parts. A list of recommended spare parts follows and is arranged to facilitate choosing the correct parts for the breakers involved. Two columns on this list give the quantities recommended for an installation of one to five breakers and for an installation of five or more breakers.

Ref. No.	Description		Drawing No.	Recommend for Stock 1-5 Breakers	5 or more Breakers
21-3	Contact Finger Assembly				
		1200 Amps	71-201-738-501	2	6
		2000 Amps	71-201-458-501	2	6
		3000 Amps	71-240-442-501	2	6
1-50	Solenoid (spring release)				
		230V DC	W-549-204	1	1
		48V DC	W-549-108	1	1
	Y Relay	230V DC	W-541-307	1	1
		48V DC	W-541-309	1	1
1-49	Solenoid (trip)	230V DC	W-549-204	1	1
		48V DC	W-549-108	1	1
21-25	Barrier Stack		71-302-776-501	2	6
24-3	Contact Finger (Stationary)		71-111-458-501	10	30
24-4	Arcing Contact (Stationary)		71-113-148-501	3	3
25-3	Contact (Moving)		71-207-476-504	3	3
25-8	Washer		71-111-446-001	4	12
26-5	Transfer Stack		71-207-489-502	3	3

6.3 REPLACING PARTS

Before removing any part, observe its function and adjustment. By so doing, it is usually possible to avoid any appreciable amount of adjustment work after the installation of the replacement part.

CAUTION: BEFORE REMOVING ANY PART, MAKE SURE THAT THE BREAKER AND ITS OPERATING MECHANISM IS DISCONNECTED FROM ALL ELECTRIC POWER AND THAT THIS BREAKER IS IN THE OPEN POSITION.

6.3a PHASE BARRIERS (FIG. 21)

Disconnect springs (21-41) and lower panel (21-32) to floor. Remove bar (21-26) and then two outer phase barriers (21-5). Next remove two screws (21-13), plate (21-8), bar (21-27) and channel (21-51) in order as listed. Slide out inner phase barrier assembly (21-9). Replace parts in reverse order making certain that barriers are properly seated in their locating slots.

6.3b BARRIER STACK

To replace a barrier stack it is necessary to first remove the phase barriers. (See Section 6.3a) Next loosen two screws (21-50) and one screw (21-49) permitting tube (26-18) and deflector (21-28) or (21-29) to be removed as a unit. Note that the difference between inner and outer deflectors is the block to which bar (21-26) is fastened. This block extends beyond the rest of the deflector on the two outer phases.

The barrier stacks (26-23) can next be removed. Care must be taken as a slotted refractory plate fits between each guide (26-7) and each arc runner (26-3) and (26-4).

On installation make certain the "Vee" slots of the barrier stack are downward and that the slotted refractory plate slips between the arc runner and its guide.

On replacing the tube (26-18) avoid any twisting which could damage parts of the barrier stack. Tighten screws (21-49) and (21-50).

Replace phase barriers as described in section 6.3a.

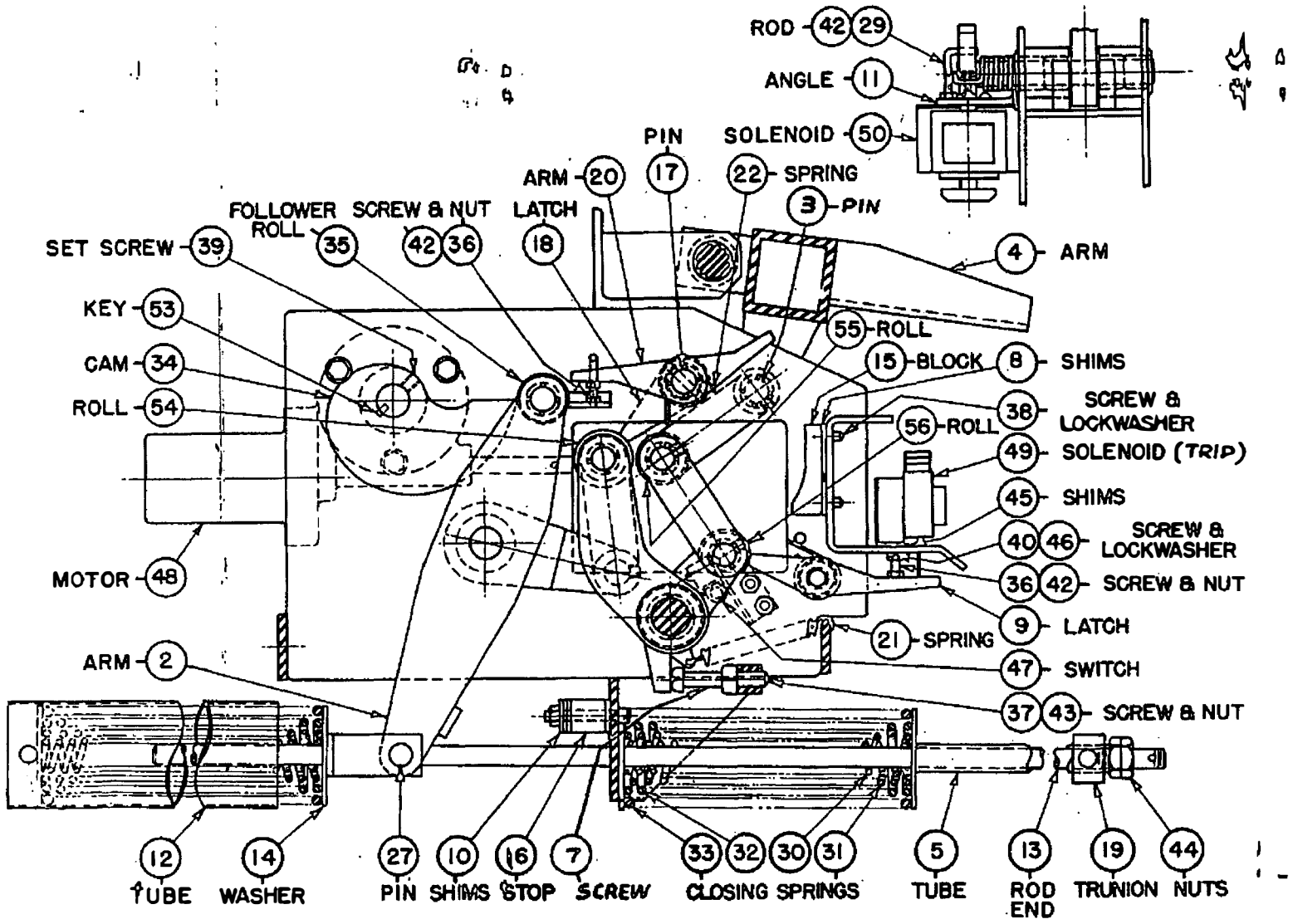

FIG. 1

TYPICAL STORED ENERGY CLOSER

JULY 7, 1961 71-302-902

ALLIS-CHALMERS MANUFACTURING COMPANY

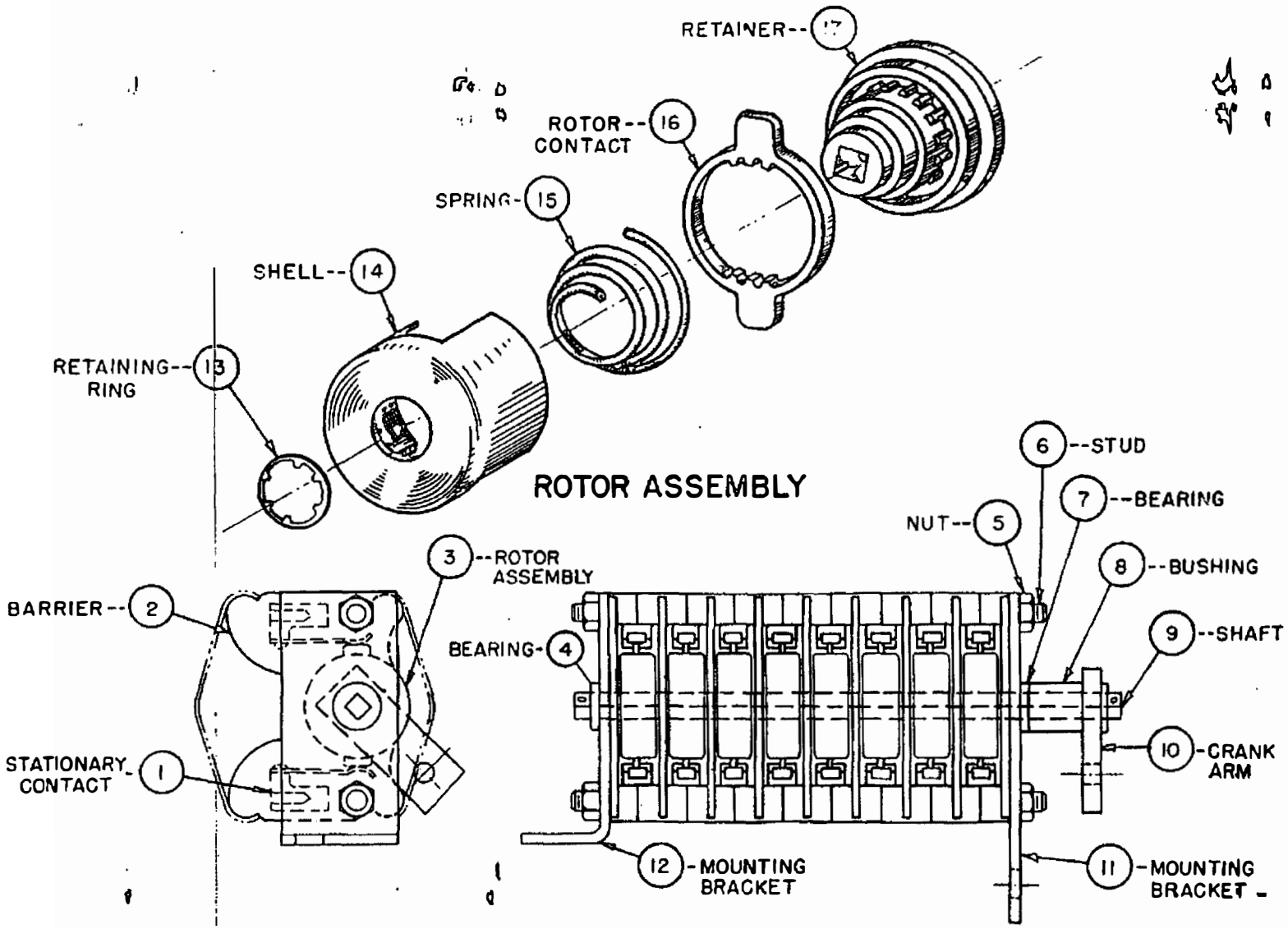

FIG. 11

TYPICAL AUXILIARY SWITCH

JULY 16, 1958 71-301-758

ALLIS-CHALMERS MANUFACTURING COMPANY

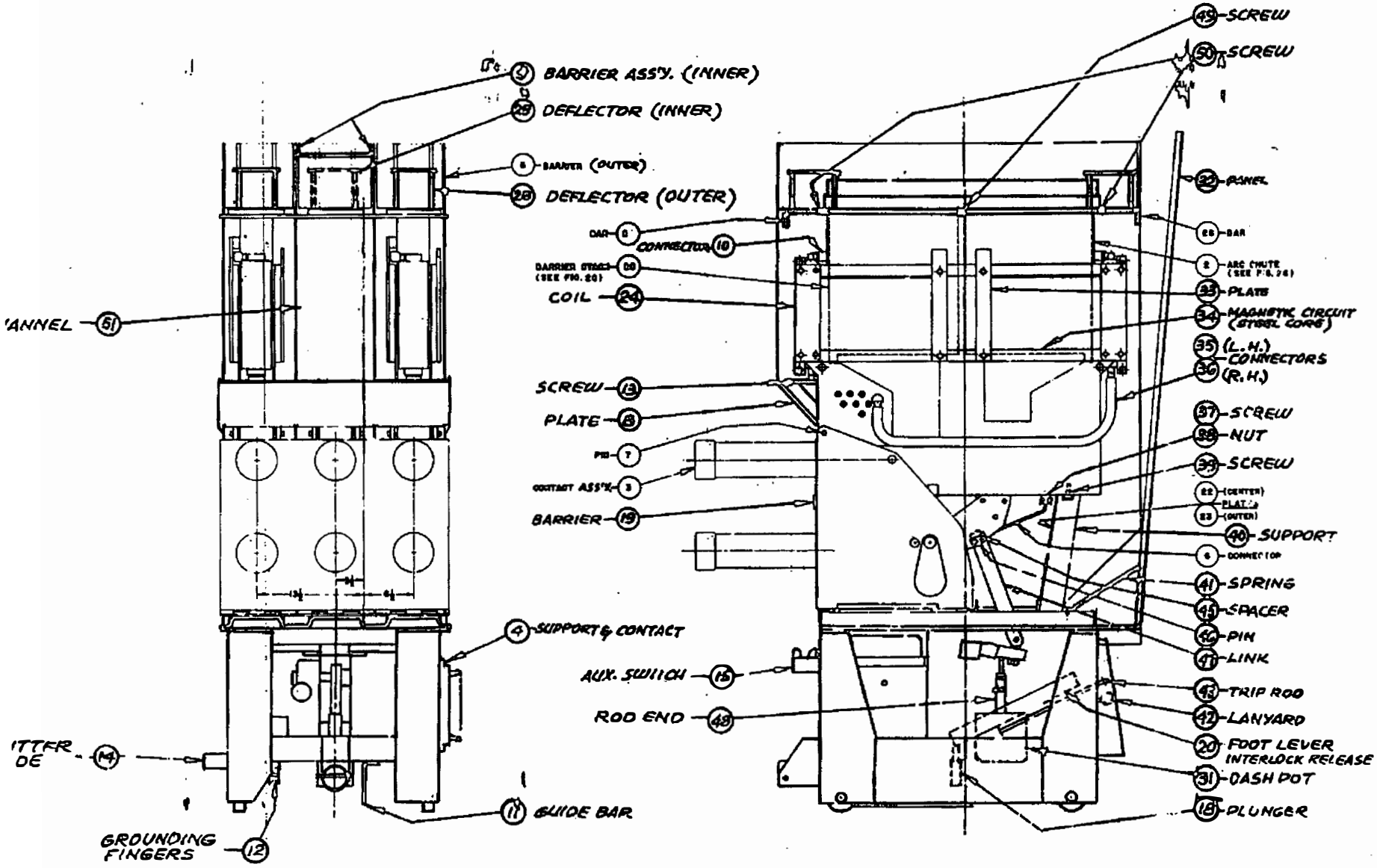

FIG. 21
TYPICAL MAGNETIC BREAKER ASSEMBLY
AUG. 18, 1961 71-114-889

ALLIS-CHALMERS MANUFACTURING COMPANY

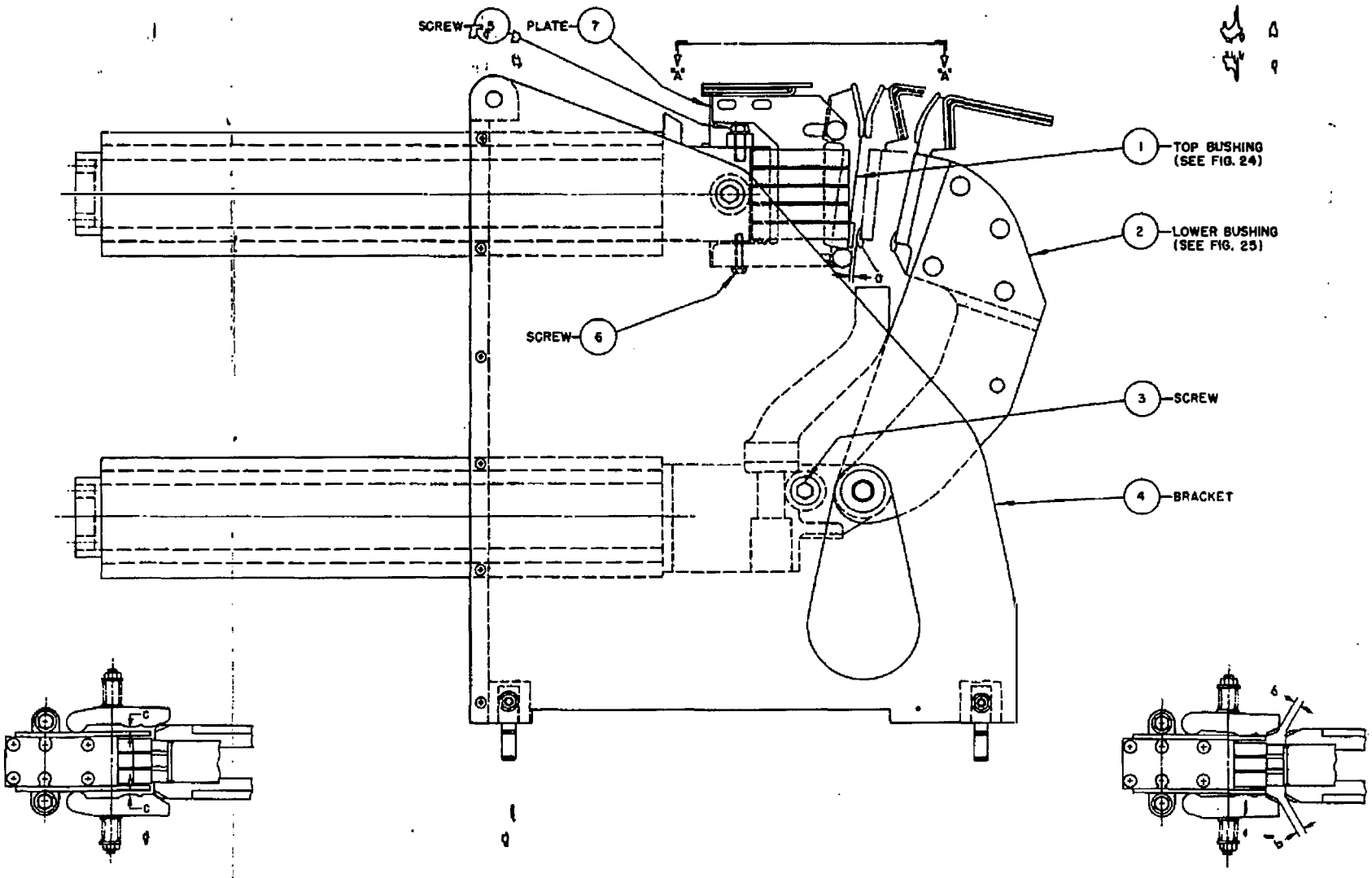

FIG. 23

TYPICAL STUD & SUPPORT ASSEMBLY

MAY 9, 1960

71-401-259

ALLIS-CHALMERS MANUFACTURING COMPANY

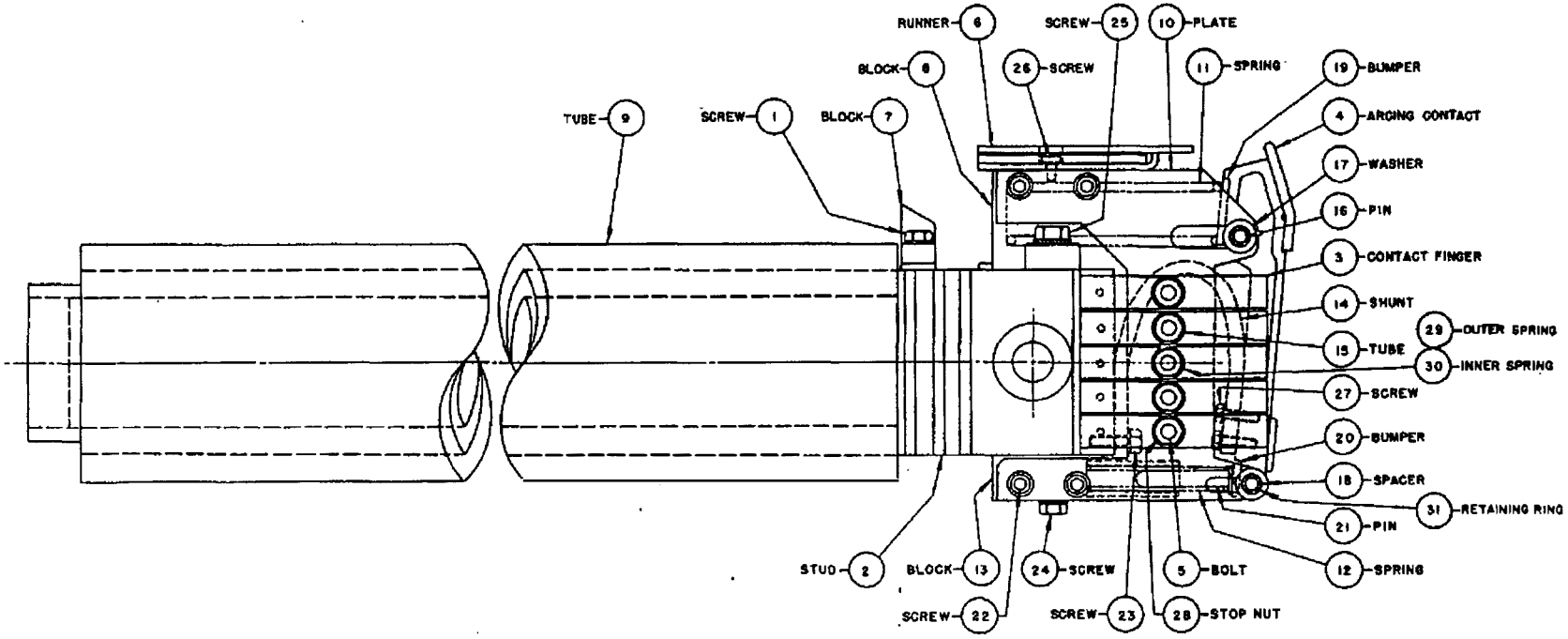

FIG. 24

TYPICAL TOP BUSHING ASSEMBLY

APRIL 28, 1960 71-401-252

ALLIS-CHALMERS MANUFACTURING COMPANY

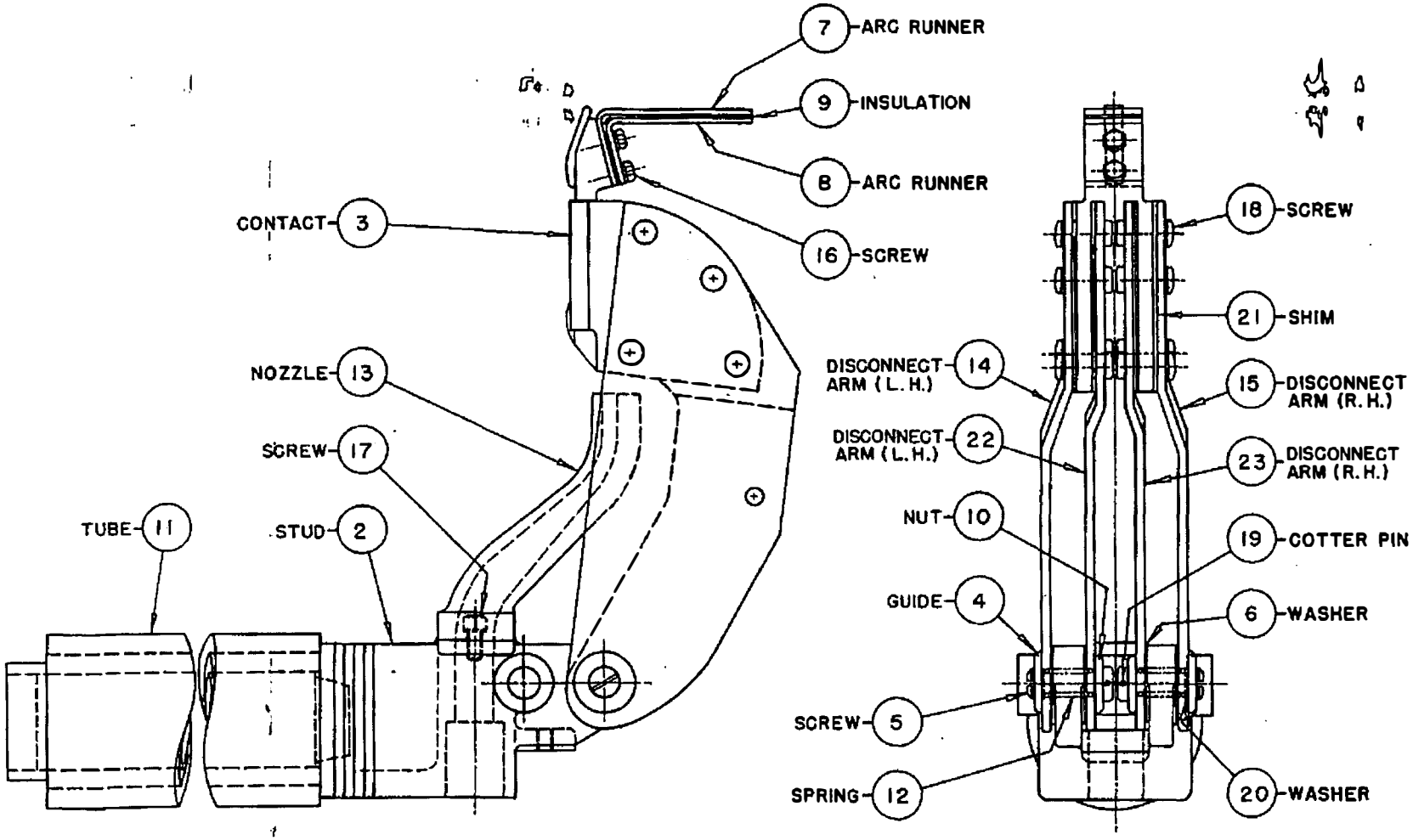

FIG. 25

TYPICAL LOWER BUSHING ASSEMBLY

APRIL 29, 1960

71-302-468

ALLIS-CHALMERS MANUFACTURING COMPANY

ALLIS-CHALMERS MANUFACTURING COMPANY

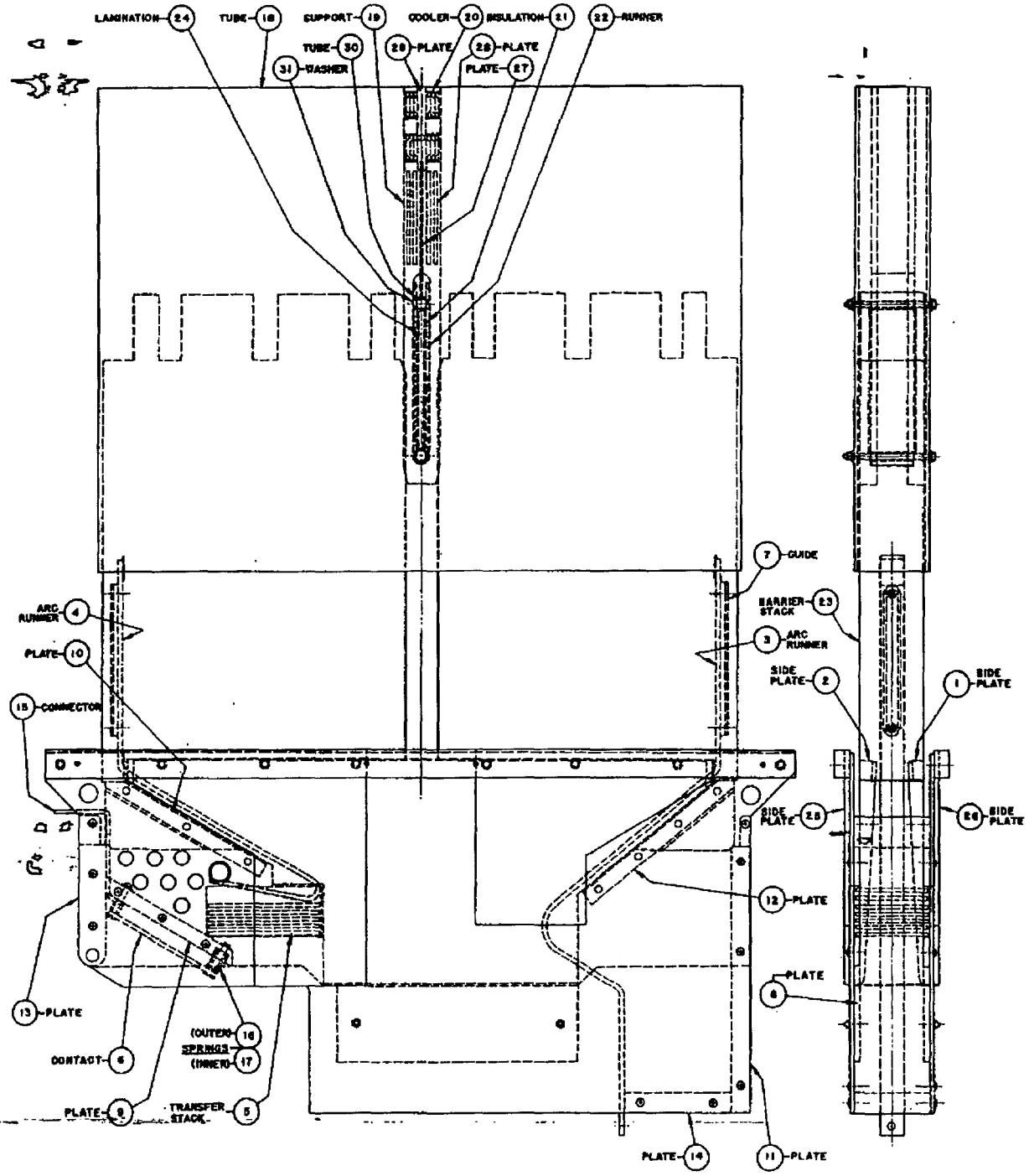

FIG. 26

TYPICAL ARC CHUTE

AUG. 16, 1961 71-114-858

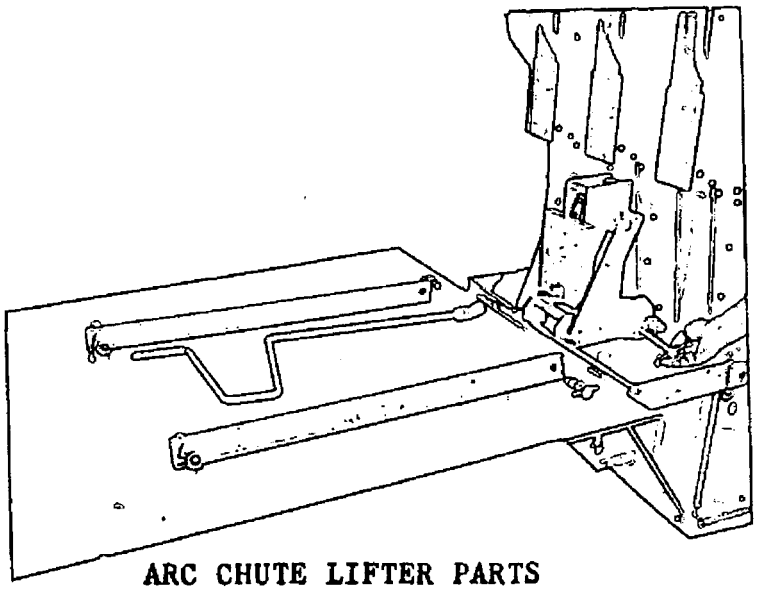

Illust. #205063

ARC CHUTE LIFTER PARTS

Unfasten panel springs and remove barriers before mounting chute lifter.

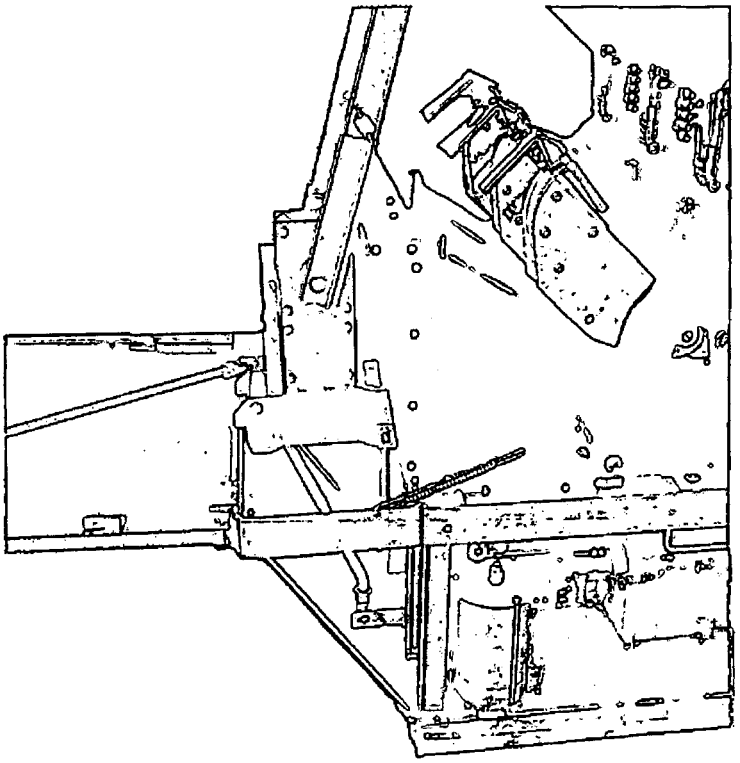

Illust.#205064

ARC CHUTE LIFTER ON
SOLENOID OPERATED BREAKER.

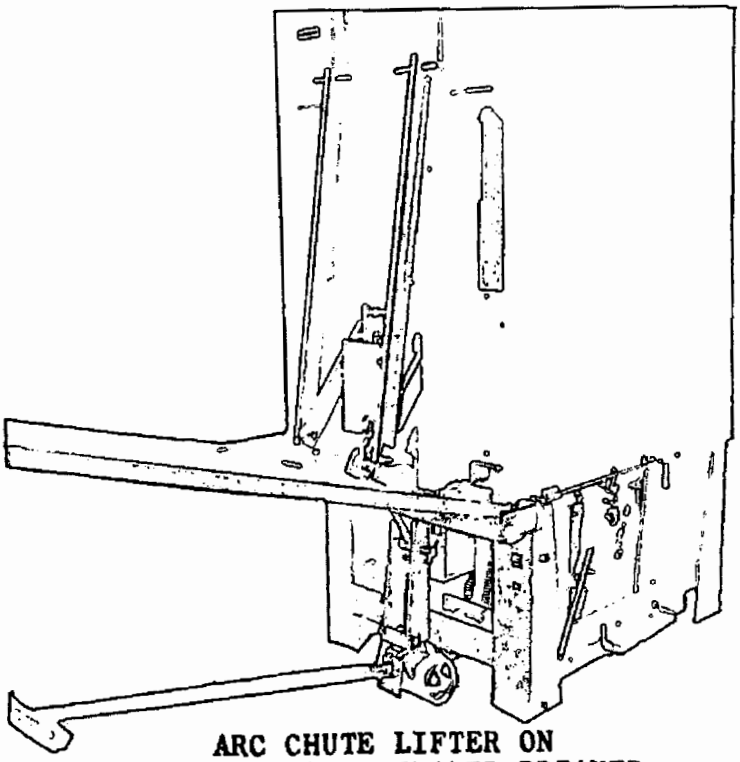

Illust. #205065

ARC CHUTE LIFTER ON
STORED ENERGY OPERATED BREAKER.

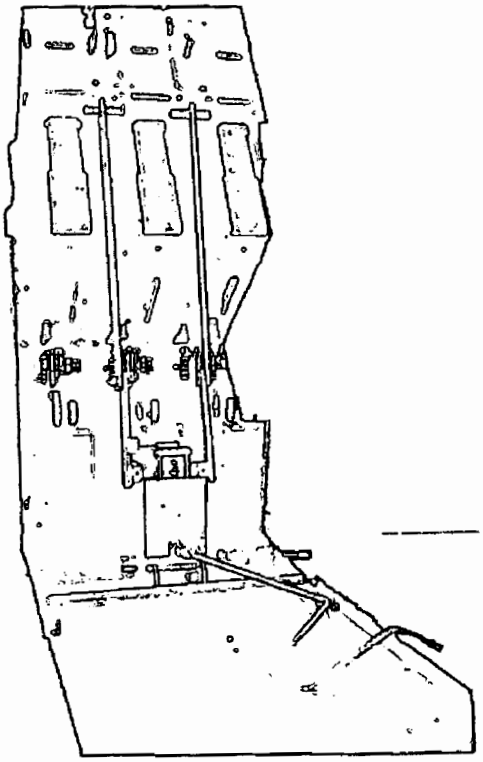

Illust. #205066

ARC CHUTE TILTED BACK