SIEMENS

Maintenance

Switchgear Division Products

Guide for a
Switchgear
Periodic
Maintenance
Program
SG3388

Table of Contents

A. FORWARD 1

B. FREQUENCY OF MAINTENANCE 2

C. GENERAL RECOMMENDATIONS AND CONSIDERATION 3
- 1. Enclosure 3
- 2. Moisture 3
- 3. Insulation 4
  - (a) Electrical Distress 4
  - (b) Corona 5
  - (c) Tracking 5
  - (d) Thermal Damage 6
- 4. Bolted Joints 7
- 5. Lubrication 7

D. PREPARATION FOR MAINTENANCE & INSPECTION 8

E. MAINTENANCE & INSPECTION PROCEDURE FOR CIRCUIT BREAKERS 9

F. GROUND AND TEST DEVICE 10

G. MAINTENANCE & INSPECTION PROCEDURES FOR CIRCUIT BREAKER COMPARTMENT 11

H. MAINTENANCE & INSPECTION PROCEDURE FOR MAIN BUS COMPARTMENT 12

I. INSTALL CIRCUIT BREAKER IN CUBICLE 13

J. INSTRUMENT PANELS 13

K. SERVICE AUXILIARY COMPARTMENTS 14

L. BUS INSULATION TESTS 14

M. RESTORING SERVICE 15

EXHIBIT NO. 1—MAINTENANCE CHECK LIST FOR VACUUM CIRCUIT BREAKERS 16

EXHIBIT NO. 2—MAINTENANCE CHECK LIST FOR AIR CIRCUIT BREAKERS 17

EXHIBIT NO. 3—MAINTENANCE CHECK LIST FOR SWITCHGEAR CUBICLES 18

METHOD FOR CHECKING OPENING AND CLOSING TIMES 20

SERVICE TIPS—CIRCUIT IN CORROSIVE ENVIRONMENTS 22

PRODUCT TECHNICAL DATA 24

LUBRICATION INSTRUCTIONS FOR LOW VOLTAGE AIR CIRCUIT BREAKER 26

LUBRICATION INSTRUCTIONS FOR 5 & 15 kV AIR MAGNETIC CIRCUIT BREAKER WITH MODEL SE-3 OR SE-4 OPERATOR 28

LUBRICATION INSTRUCTIONS FOR 5 & 15 kV AIR MAGNETIC CIRCUIT BREAKER WITH MODEL 515 OPERATORS 35

LUBRICATION INSTRUCTIONS FOR 34.5 kV VACUUM CIRCUIT BREAKERS 39

GROUND AND TEST DEVICES (SPECIFICATIONS) 42

Instructions

Forward

This Guide is to provide some additional recommendations and suggestions for the Periodic Maintenance of Siemens switchgear cubicles, various circuit breakers and associated metering and relaying.

This Guide is intended to supplement the "INSTALLATION, OPERATION MAINTENANCE INSTRUCTIONS FOR ELECTRICAL EQUIPMENT" in the Instruction Manuals originally furnished with your equipment and other switchgear products covered in this Guide.

NOTE: Effective January 1, 1985, all of the assets of the former Electrical Products Group of Siemens-Allis were transferred to a new corporation called:

SIEMENS ENERGY & AUTOMATION, INC.

Thus, new products, publications and literature will bear the Siemens name.

Though all references herein will state Siemens, they also apply to the Switchgear products labelled Allis-Chalmers and Siemens-Allis

Field Service Operation

Siemens can provide competent, well-trained Field Service Representatives to provide technical guidance and advisory assistance for the installation, overhaul, repair and maintenance of Siemens equipment, processes and systems. Contact regional service centers, sales offices or factory for details.

Frequency of Maintenance

Recommended frequency of maintenance will depend upon environmental and operating conditions, so that no fixed rules can govern all applications. During the first three years of service an annual inspection of the entire switchgear assembly including withdrawable circuit breaker elements is suggested as a minimum. Inspection frequency can be increased or decreased depending on experience.

When operating requirements prevent the shutdown of an entire switchgear assembly for inspection of insulation, a partial shutdown and inspection may dictate a need for a full shutdown to avoid a potential failure. However, conditions in partially inspected areas are not necessarily representative of conditions in energized areas not accessible for inspection.

The following factors will affect the timing of inspections:

(1) Feeder, bus, or system fault occurrence.

(2) Sustained unusual or abnormal operating conditions; e.g., switching or lightning surges, sustained overloads.

(3) Extremes in environmental conditions, such as temperature, heavy dust, high winds, rain, fog, smog, fumes of many kinds, fly ash, salt spray, high humidity, or unusual temperature changes

(4) Emergency shutdowns

(5) Scheduled shutdowns.

If the switchgear is installed in an air conditioned room, it would generally not be affected by external environmental conditions. However, if doors are left open or air conditioning is not operating, additional cleaning may be required.

General Recommendations And Considerations

1. **Enclosure**

The switchgear enclosure is designed to:

(a) Protect personnel from energized parts and mechanisms

(b) Protect the equipment from moisture and dust.

It is important keep doors closed and covers bolted in place during operation for the above two reasons

2. **Moisture**

Moisture accumulation may occur on internal surfaces of enclosure even though they are indoors. The source of this moisture is condensation. When the temperature of any surface drops below the dew point of the air with which it is in contact, condensation will occur

Water vapor will be added to the internal atmosphere of the switchgear if there is standing water in the vicinity of floor openings or bottom ventilation openings. All floor openings, other than those specifically provided for drainage purposes, should be effectively sealed. All unused conduits or openings around cables at entrance ducts should be sealed with an electrical grade of caulking compound. Standing water should be eliminated permanently.

Conditions causing condensation are intermittent and may not be prevalent at the time of inspection. All internal surfaces should be examined for signs of previous moisture such as:

(1) Droplet depressions or craters on dust-laden surfaces.

(2) Deposit patterns, such as might occur if a film of dirty water were left to evaporate on a flat surface.

(3) Excessive rust anywhere on the metal housing.

Moisture accumulation is prevented by heat and air circulation. Therefore, it is very important to make sure that space heaters (standard on outdoor; optional on indoor) and thermostats are functioning properly and that the filters are clean.

3. **Insulation**

With proper maintenance, the insulation materials used in switchgear assemblies are designed for and expected to withstand operating voltages for many years. During this time, the insulation will be subject to cumulative deteriorating conditions which detract from voltage withstand capability.

Moisture combined with dirt is the greatest deteriorating factor for insulation. Even small amounts of moisture (such as condensation) if allowed to accumulate can result in electrical leakage which leads to tracking and eventual flashover.

The surface of all insulating members should be inspected before any cleaning or dust removal, and reinspected after cleaning. Moisture droplets often leave craters or depressions in a dust layer without staining the member under the dust. Conversely, a carbon track starting to form on a bus support may be completely masked by later deposits of dust.

Insulation can be damaged in the following ways:

(a) Electrical Distress

The following are specific areas in which electrical distress is more likely to occur and should be given special attention:

1. Boundaries between two adjoining insulators.
2. Boundaries between an insulating member and the grounded metal structure.
3. Taped or boot-covered splices or junctions
4. Bridging paths across insulating surfaces; either phase-to-phase or phase-to-ground.
5. Hidden surfaces such as the adjacent edges between the upper and lower member of split type bus supports or, the edges of a slot through which a bus bar protrudes.
6. Edges of insulation surrounding mounting hardware: either grounded to the metal structure, or floating within the insulating member.

Damage caused by electrical distress will normally be evident on the surface of insulating members in the form of corona erosion of markings or tracking paths.

(b) **Corona**

If corona occurs in switchgear assemblies, it is usually localized in thin air gaps that exist between high voltage bus bar and its adjacent insulation, or between two adjacent insulating members. It may form around bolt heads or other sharp projections if not properly insulated or shielded.

Siemens switchgear has insulation which is not subject to deterioration by corona. However, contamination of surfaces must be prevented.

(c) **Tracking**

Tracking is an electrical discharge phenomenon caused by electrical stress on insulation. This stress can occur phase-to-phase or phase-to-ground.

Tracking develops in the form of streamers or sputter arcs on the surface of insulation usually adjacent to high voltage electrodes. One or more irregular carbon lines in the shape of tree branches is the most common sign of tracking.

Surface tracking can occur on the surfaces of organic insulation or on contaminated surfaces of inorganic insulation. The signs of tracking on organic materials are eroded surfaces with carbon lines. On track resistant organic materials these erosion patterns will be essentially free of carbon.

Tracking can propagate from either the high voltage or ground terminal. It will not necessarily progress in a regular pattern or by the shortest possible path.

(d) **Thermal Damage**

Temperatures even slightly higher than design levels for prolonged periods, can shorten the electrical life of insulating materials. Prolonged exposure to higher than rated temperatures can cause physical deterioration of these materials resulting in lower mechanical strength. Localized heating (hot spots) can sometimes occur but be masked because the overall temperature of the surroundings is not raised appreciably. Infrared inspection on periodic basis is recommended. The infrared sensor can detect the presence of abnormal heat. Loosely bolted connections in a bus bar splice or cable lug connection are examples of this. It can also occur at the primary disconnects if the silver plating corrodes badly due to contaminants in the atmosphere.

Since power should be removed prior to a visual inspection, it is unlikely that temperature itself could be relied upon after shutdown to signal potentially damaging heat. Some external conditions which form the basis for detecting heat damage are:

(a) Discoloration—usually a darkening—of material or finishes.

(b) Crazing, cracking, flaking of varnish coatings.

(c) Embrittlement of tapes and cable insulation.

(d) Delamination.

(e) Generalized carbonization of materials or finishes.

(f) Melting, oozing, or exuding of substances from within an insulating assembly.

Insulating materials that have been physically damaged should be replaced. In summary, the important things to remember in maintenance of insulation is, KEEP IT CLEAN, KEEP IT DRY AND KEEP IT COOL.

If there is evidence of overheating, determine the cause and correct it. The cause may be excessive dirt on surface, plugged ventilation openings, loose hardware, or overloading.

Remember, installations can be checked for overheating by using infra-red testing equipment. The bus and connections can be checked with some of these sensors without removing the rear cover plates.

4. **Bolted Joints**

All bus joints of either silver plated copper, tin plated copper when specified or tin-plated aluminum bus bars secured with ½" Grade 5 steel hardware. This hardware is torqued to 50-75 Ft/Lbs (67.8-101.7 N·m) at the factory. Shipping split and cable lug hardware must be torqued to these same values during installation. In some applications silicone bronze hardware is used in which case it is torqued to 30-40 Ft/Lbs. (40.7-54.2 N•m). When aluminum bus is furnished conical washers ("Belleville" washers) are used to insure maintenance of pressure. There is no reason to expect loosening of hardware during the life of the equipment. On joints which are insulated with PVC boots, glastic caps or tape, it will not be possible to check for loose hardware without removing the insulation. Thus you may not want to check bus joint hardware unless inspection of the insulation shows evidence of overheating.

5. Lubrication

The lubrication of moving parts and electrical contacts is very important. The lubrication provides a degree of protection against corrosion of critical parts.

Corrosion problems in switchgear are primarily caused by the chemical reaction of hydrogen sulfide, or free sulphur acting upon silver-plated contacts. There are other contaminants which are often present in many types of industrial environments such as ammonia, sulphur dioxide, chlorine, and nitrogen peroxide. Any or all of these can react adversely on contacts and other plated current carrying parts.

At each maintenance interval, all of the old grease must be wiped off sliding electrical contacts, and new lubricant applied. Be careful not to get grease on adjacent insulation Apply only Siemens contact lubricant—(Part No. 15-171-370-002) in a layer between 1/32" and 1/6" thick (.8-1.6mm).

See attached lubrication instructions for additional information.

Preparation For Maintenance And Inspections

Before starting work on the switchgear, the following is required:

⚠ DANGER

1. Do not work on energized equipment. Unauthorized personnel should not not be permitted near energized equipment.

   Plan the time for maintenance with operating personnel so that the switchgear can be de-energized, and safely grounded.

   NOTE: Switchgear assemblies are enclosed on all sides and top with sheet metal. Access into the enclosure is provided by doors or removable covers. Although the bus and connections are insulated in metal-clad switchgear assemblies, it is a coordinated insulation system: insulation plus air or creep distance equals a given insulation level.

⚠ DANGER

BUS INSULATION IN METAL-CLAD SWITCHGEAR **IS NOT** DESIGNED TO PREVENT SHOCK. CONTACT WITH THIS INSULATED BUS COULD RESULT IN SHOCK, BURNS OR POSSIBLY DEATH.

See ANSI C37.20-6.2.4 which is quoted as follows: "This insulating covering is a requirement of metal-clad switchgear and is provided to minimize the possibility of communicating faults which would result if foreign objects momentarily contacted bare bus. This insulating covering is usually only a part of the primary insulation system and in such cases the outer surface of this insulating covering will not be at ground potential. It should not be assumed, therefore, that personnel can contact this insulating covering with complete safety."

2. Disable any remote control and automatic transfer schemes.
3. Disconnect and ground all potential transformers.
4. Open all disconnects.

Maintenance & Inspection Procedure For Circuit Breakers

SEE ATTACHED EXHIBIT #1 AND #2

1. Check the breaker trip potential source.
   a. Battery Condition (if used).
      1. Voltage of each cell.
      2. Specific gravity of each cell.
      3. Cleanliness.
      4. Connections, for corrosion, looseness, electrolysis, etc., including trip circuit connections in all cubicles.
   b. Battery Charging Equipment
      1. General condition.
      2. Fuses and/or circuit breakers.
      3. Operation.
   c. "ENER/PAC" (if used) check "Push to Test" feature.
2. Select the first cubicle to be maintained.
3. Remove the Circuit Breaker. Inspect and maintain per the appropriate "Maintenance Check List for Circuit Breakers."

Ground and Test Device

If a ground and test device was furnished, insert this in the circuit breaker compartment and use it in accordance with instruction book furnished for the device and your local safety practices.

⚠ CAUTION

PRIOR TO GROUNDING EITHER UPPER OR LOWER STUDS, THEY MUST FIRST BE DE-ENERGIZED. Check the single line or three line diagram for the equipment to determine if remote circuit breakers must be opened prior to grounding. The use of the ground and test device in bus tie units is not recommended because one set of studs will be impossible to de-energize without a major shut-down.

Similarly, some cubicles could be back-fed from another bus. A hot stick potential indicator is sometimes used as a check.

⚠ DANGER

IMPROPER USE OF A GROUND AND TEST DEVICE COULD RESULT IN VERY SERIOUS INJURY, SHOCK OR POSSIBLE DEATH.

IT IS IMPERATIVE THAT YOU BECOME TOTALLY FAMILIAR WITH EVERY ASPECT OF A GROUND AND TEST DEVICE BEFORE USING IT. YOU MUST BE CERTAIN WHICH PRIMARY CIRCUITS CONNECT TO EACH STUD AND IF THEY ARE OR COULD BE ENERGIZED DUE TO BACKFEED. YOU MUST INSURE THAT THE SELECTOR SWITCH IS SET PROPERLY AND THAT THE CIRCUIT IS DE-ENERGIZED BEFORE DOING ANY LOW VOLTAGE (MEGGER) TESTING. **MAKE NO ASSUMPTIONS AND DOUBLE CHECK EVERY STEP.**

Maintenance & Inspection Procedure For Circuit Breaker Compartments

NOTE

Use the "Maintenance Check List—Exhibit #13" with the following procedures:

1. Inspect the Circuit Breaker compartment for moisture, dust, dirt and loose parts. Record data on "Maintenance Check List for Switchgear Cubicles." Clean as necessary.

⚠ DANGER

2. IF YOU ARE GOING TO OPEN THE SHUTTERS COVERING THE PRIMARY DISCONNECTS, MAKE CERTAIN THAT BOTH LINE/LOAD AND BUS ARE DE-ENERGIZED FIRST. DO NOT MAKE THIS CHECK FOR BUS TIE UNITS, SOUCE BREAKERS OF UNITS THAT COULD BE BACK-FED UNLESS ALL BUSSES ARE DE-ENERGIZED. **FAILURE TO DO THIS CAN RESULT IN SERIOUS INJURY, BURNS OR POSSIBLE DEATH.** THEN OPEN THE SHUTTERS AND BLOCK THEM OPEN. USING A HOT STICK POTENTIAL DEVICE, DOUBLE-CHECK THAT ALL DISCONNECTS ARE DE-ENERGIZED.

3. Using a flashlight, inspect the silver-plated primary disconnects for signs of overheating or excessive wear (silver-plating worn through to copper). Record condition on check list. Clean and lubricate the silver-plated contacts per instruction book.

4. Inspect the primary disconnect mounting or housing for dust, moisture or unusual appearance. Record condition on check list. Clean insulation with a suitable cleaner per instruction book.

5. Test insulation with a megger on all phases to ground. You would normally not be as interested in what your megger reading is, but rather what it shows in respect to previous readings and whether they are approximately the same or are decreasing or increasing. Systematic periodic use of the megger (always use same rating megger) will provide you with invaluable information. There are no rule-of-thumb formulas for exact values of insulation resistance owing to the variations in materials used and how they were built up, moisture, temperature. surface leakage etc. For many years maintenance personnel have used the 1 megohm per kV plus 1 megohm with a 1 megohm minimum as a general guide. This could be acceptable in some cases and would allow you to energize. Our experience has shown that typically 50 megohms on 480V - 600V class switchgear and 200 megohms on 5kV - 15kV and 38kV class is what you should look for. These values would be with the breakers removed and typically you would look for 150 megohms with breakers in connect position and closed, on the 5-15 and 38kV equipment or 35 megohms on the 480V - 600V. Important: When you megger each phase to ground look for any differences in those readings. All 3 phases to ground should be very close and if not look for the cause and correct.

6. Return shutters to closed position. Check for ease of operation to be sure they close and open freely. Lubricate operating linkage as required.

7. Inspect the current transformers.

8. Inspect other items in the circuit breaker compartment per the check list.

9. Remove old lubricant and lubricate auxiliary switch contacts with Part No. 15-171-370-002, Siemens-Allis Electrical Contact Lubricant.

Maintenance & Inspection Procedure For Main Bus Compartment

1. Make sure the bus and cables are de-energized. The ground and test device can be used in any of the feeder compartments to ground the bus. **See Section "F".**

2. Remove the bolted access plates. These are usually split to facilitate removal with the power cables in place.

3. Inspect the compartment per the check list.

NOTE

The main bus compartment is designed for maximum reliability since a shutdown is usually required to de-energize the bus section for maintenance. The insulated bus is well supported and generous creepage distance is provided. The space heaters, when furnished, project into the bus compartment to minimize condensation. Nevertheless, inspection of the bus compartments is important to insure that all surfaces are clean and dry and that there are no signs of tracking or corona.

4. Clean insulating surfaces. Correct the cause if signs of overheating are present.

5. Replace bolted covers of bus compartment.

6. Remove the ground and test device.

Install Circuit Breaker In The Cubicle

Refer to Instruction Book.

Place the circuit breaker in the cubicle in the test position.

Energize control circuit. Using the control switch close and trip the circuit breaker in the test position to verify its performance. Note—this will also verify performance of the control power source, (battery or control power transformer etc.) control wiring, control circuit fuses, shunt trip coil, and capacitor trip or ENER/PAC (if used).

J. Instrument Panels

NOTE: Most meters and instrument transfer switches can be checked while the switchgear is energized. Tests of overcurrent relays can be performed while the switchgear is energized. Refer to the product instruction books for details.

All overcurrent relays would probably have been set in accordance with a "Coordination Study" which was prepared prior to initial installation. Check or recheck relay settings, instrument and control switches, and inspect their contacts.

Operation of control switches can be checked with the circuit breakers in the test position.

Lockout relay operation should be checked.

Automatic transfer and/or manual transfer schemes are designed to operate per a detailed procedure. This procedure must be reviewed and used to check and exercise these schemes.

K. **Service Auxiliary Compartments**
Certain units are auxiliary units. These may contain potential transformers, control power transformers, and/or other devices.

⚠ DANGER

THE STATIONARY PRIMARY DISCONNECTS OF POTENTIAL AND CONTROL POWER TRANSFORMERS ARE NORMALLY INACCESSIBLE. MAKE CERTAIN HOWEVER THAT THESE ARE DE-ENERGIZED BEFORE CLEANING THE COMPARTMENT. FAILURE TO DO SO COULD RESULT IN SERIOUS INJURY, BURNS OR POSSIBLE DEATH. CLEAN THESE TRANSFORMERS AND INSULATORS. CHECK AND CLEAN COMPONENTS IN OTHER AUXILIARY UNITS.

Bus Insulation Tests

Refer to Instruction Book.

After completing maintenance of all units in the bus section, test the bus insulation with a 500V or 1000V megger. Look for 200 megohms or higher. Pay particular attention to differences in readings from each phase to ground. If differences exist, determine cause.

If desired, a high potential (HI-POT) test can then be performed. This test should be performed at 75% of the factory test level.

Potential transformers, control transformers, lightning arresters, and surge capacitors must be disconnected during this test.

TYPICAL FIELD HI-POT VALUES for primary bus are as shown below. These values are for one minute duration only.

Equipment Nominal Voltage Ratings	AC HI-POT	DC HI-POT
600-volts	1650 volts	2333 volts
4.16 kV	14.3 kV	20.2 kV
7.5 kV	27.0 kV	38.2 kV
13.8 kV	27.0 kV	38.2 kV
34.5 kV	60.0 kV	85.0 kV

HI-POT values one minute duration for secondary circuits: 1125 volts AC, or 1590 volts DC.

⚠ CAUTION

Certain control devices such as, charging motors, pushbuttons, bell alarms etc., may have only a 900 volt rating. 75% of 900V would allow a field HI-POT of only 675 volts AC or 954 volts DC.

Do not HI-POT static trip devices.

M. Restoring Service

After completing the servicing, return all circuit breakers to their units, close control power supply switches. Check breaker operation in the test position, rack to connect position, connect all potential transformers, arm automatic transfer circuits, close and latch all doors securely, and re-energize.

Exhibit No. 1
Check List For Vacuum Circuit Breakers

Date Installed: _____ Date Serviced: _____ Job No.: _____
Taken From Cubicle # _____ Returned to Cubicle # _____
Type _____ Rated Volts _____ Rated AMP _____ S/N _____

Follow Appropriate Instruction Book

- ☐ Vacuum Tubes Cleaned.
- ☐ Vacuum Tubes "A" Dim. Checked. Record Dim. _____
- ☐ Vacuum Tubes Hi-Potted. Phase 1 _____ 2 _____ 3 _____
- ☐ Phase Barriers examined.
- ☐ Checked for Loose Hardware.
- ☐ Charged with Plug Jumper.
- ☐ Closed Breaker Electrically with Control Switch on Panel.
- ☐ Checked Position Indicator.
- ☐ Tripped Breaker with Control Switch on Panel.
- ☐ Checked position indicator.
- ☐ Depress Trip Rod and Close Breaker with Control Switch on Panel. (Breaker should be trip free.)
- ☐ Release Trip Rod, close and Trip Breaker. (Breaker will close and trip.)
- ☐ Checked Breaker opening and Closing times.
- ☐ Checked and Lubricated Primary Disconnects.
- ☐ Checked and Lubricated Secondary Disconnects.
- ☐ Checked and Lubricated Auxiliary Contacts.
- ☐ Mechanical Interlocks checked.
- ☐ Electrical Interlocks checked.
- ☐ S. E. Operator checked and lubricated.
- ☐ Ground Contact checked.
- ☐ Limit Switches checked.
- ☐ Charge-Discharge Indicator checked.
- ☐ Counter-Reading _____
- ☐ Alignment in Cubicle correct.
- ☐ Operated in Cubicle test position.
- ☐ AC ☐ DC _____ Control Volts

_____ ° _____ ° _____ ° _____

☐ Breaker Timed: _____ Cycles to Trip: _____ Cycles to Close: _____

☐ Hi Pot Test _____ Volts ☐ AC ☐ DC _____ Misc. AMP.

☐ Breaker Placed into Service, Date: _____

Environmental Conditions: _____

Remarks: (Show "Remarks" on reverse side.)

SIEMENS Signed: _____

Exhibit No. 2
Check List For Vacuum Circuit Breakers

Date Installed: _____ Date Serviced: _____ Job No.: _____
Taken From Cubicle # _____ Returned to Cubicle # _____
Type: _____ Rated Volts: _____ Rated AMP: _____ S/N: _____
Stored Energy: _____ Solenoid: _____ Manual: _____

Follow Appropriate Instruction Book

- ☐ Arc Chutes
- ☐ Primary Contacts
- ☐ Auxiliary Contacts Checked
- ☐ Sequence Checked
- ☐ Manual Closure Operated
- ☐ Manual Trip Operated
- ☐ Breaker Cleaned
- ☐ Hardware Tightened
- ☐ Mechanical Interlocks Checked
- ☐ Mechanism Operates Correctly
- ☐ Puffer Operation Correct
- ☐ Breaker Operated With Test Device
- ☐ Alignment in Cubicle Correct
- ☐ Operated in Cubicle Test Position
- ☐ AC ☐ DC _____ Control Volts
- ☐ Secondary Contacts
- ☐ Main Contacts Alignment & Penetration
- ☐ Checked Blow-Out Coil Connection
- ☐ Trip Coil Operated
- ☐ FC 1000 Only Blow-Out Coil Polarity Checked and Coil Connection
- ☐ Interference of Breaker to Hinge Wire
- ☐ Breaker Lubricated
- ☐ Static Trip Unit Set
- ☐ Static Trip Unit Tested
- ☐ Limit Switches Checked
- ☐ Open-Close, Disch., Indicators Checked
- ☐ Breaker Put in Service
- ☐ Counter Works Properly-Reading: _____
- ☐ Ground Contact Checked

Environmental Conditions: _____

Megger: _____ DC Volt. Phase 1: _____ Phase 2: _____ Phase 3: _____

(When meggering a pole to ground, have the other two poles connected to ground. Megger each primary contact to frame ground.)

* ☐ Breaker Timed: _____ Cycles to Trip: _____ Cycles to Close

* ☐ Hi Pot Test: _____ Volts ☐ AC ☐ DC _____ MicroAMP.

* Hinge Joint Pressure: Phase 1: _____ Phase 2: _____ Phase 3: _____

* Contact Resistance: Phase 1: _____ Phase 2: _____ Phase 3: _____

*These tests to be performed only if specified.

REMARKS: _____

SIEMENS Signed: _____

Exhibit No. 3
Maintenance Checklist For Switchgear Cubicle

Prepare a copy of this check list for each switchgear unit. Refer to appropriate Instruction Book for detailed procedures.

Cubicle Type ☐ Indoor ☐ Outdoor. Operating Voltage _____ kV Date: _____
Main Bus continuous current rating _____ Amperes: Serial No.* _____
Date of initial service: _____ Unit Number: _____

☐ Prepared for maintenance (Refer to Guide, Para. D & F)

☐ General conditions ☐ Dry ☐ Damp ☐ Clean ☐ Dusty

☐ Removed circuit breaker ☐ Serviced per separate check list.

☐ Checked door alignment ☐ Lubricate hinges.

Circuit Breaker Compartment

☐ Checked for moisture, dust and loose parts.

☐ Found compartment ☐ damp ☐ dry ☐ clean ☐ dusty.

☐ Opened shutters ⚠ DANGER: - (Refer to Para. G. 2)
⚠ DANGER: - DO NOT open shutters of bus tie units.

☐ Inspected primary disconnects. ☐ Cleaned and lubricated.

☐ inspected porcelain housing. ☐ Wiped Clean.

☐ Meggered upper disconnects. ☐ Phase 1: ☐ Phase 2: ☐ Phase 3:

☐ Closed shutters. ☐ Checked for easy operation. ☐ Lubricated.

☐ Inspected current transformers. ☐ Checked for loose wires.

☐ Inspected cubicle mounted auxiliary switches. ☐ Lubricated.

☐ Inspected space heater and thermo-disc. ☐ Checked operation.

Cable/Bus Duct Compartment ⚠ DANGER: CONDUCTORS MAY HAVE BACK FEED

☐ Determined that conductors were de-energized.

☐ Removed rear covers ☐ Checked gaskets.

☐ Inspected for signs of ☐ tracking ☐ heating. COMMENT: _____

☐ Found Compartment ☐ Damp ☐ Dry ☐ Clean ☐ Dusty

☐ Cleaned all insulation

☐ Inspected and cleaned current transformers (if provided)

Main Bus Compartment ⚠ DANGER - DE-ENERGIZE BUS - SEE DI 1

☐ Determined that conductors were de-energized

☐ Removed access covers

*The same serial number applies to all units in this line-up. Obtain serial number from rating plate located in the left end unit.

Sheet #1 of 2

Check List

Switchgear Cubicle (Con't.)

☐ Inspected for signs of ☐ Tracking ☐ Heating. Comment: _____

Found compartment ☐ Damp ☐ Dry ☐ Clean ☐ Dusty

☐ Cleaned all insulation

☐ Installed access covers

Place Circuit Breaker in cubicle.

☐ Checked clearance of breaker with cubicle hinge wiring.

☐ Checked position mechanical interlock. (Rack breaker to position between "Test" and "Connected" positions. Attempt to close breaker. Should be trip-free)

☐ Racked to "Connected" position ☐ alignment O.K.

Instrument Panel (Refer to Para. J)

☐ Checked for broken cases.

☐ Checked operation of control switch with circuit breaker in "Test" position.

☐ Tripped the breaker by passing sufficient current (or voltage) through the coils of protective relays.

☐ Examined indicating lamps and replaced as required.

☐ Checked terminal block contacts for loose connections.

Auxiliary Compartments ⚠ DANGER REFER TO PARA. K

☐ Checked potential transformers. ☐ Cleaned ☐ Checked for loose wires.

☐ Checked trunnion operation ☐ Verified disconnects making contact.

☐ Checked PT Fuses ☐ Primary ☐ Secondary

After All Units Have Been Serviced

☐ Meggered bus (lower disconnects) through ground and test device placed in any one of the feeder units.

☐ Optional: Performed high potential tests on bus (lower disconnects) through ground and test device (Same as Megger test above).

☐ Removed ground and test device.

☐ Placed all circuit breakers in "test" position. Be sure to place breakers of correct continuous current rating in each unit.

☐ Energized control circuit.

☐ Checked Close - Trip operation.

☐ Checked lockout relay operation.

☐ Returned to normal service.

NOTES:

Sheet #2 of 2

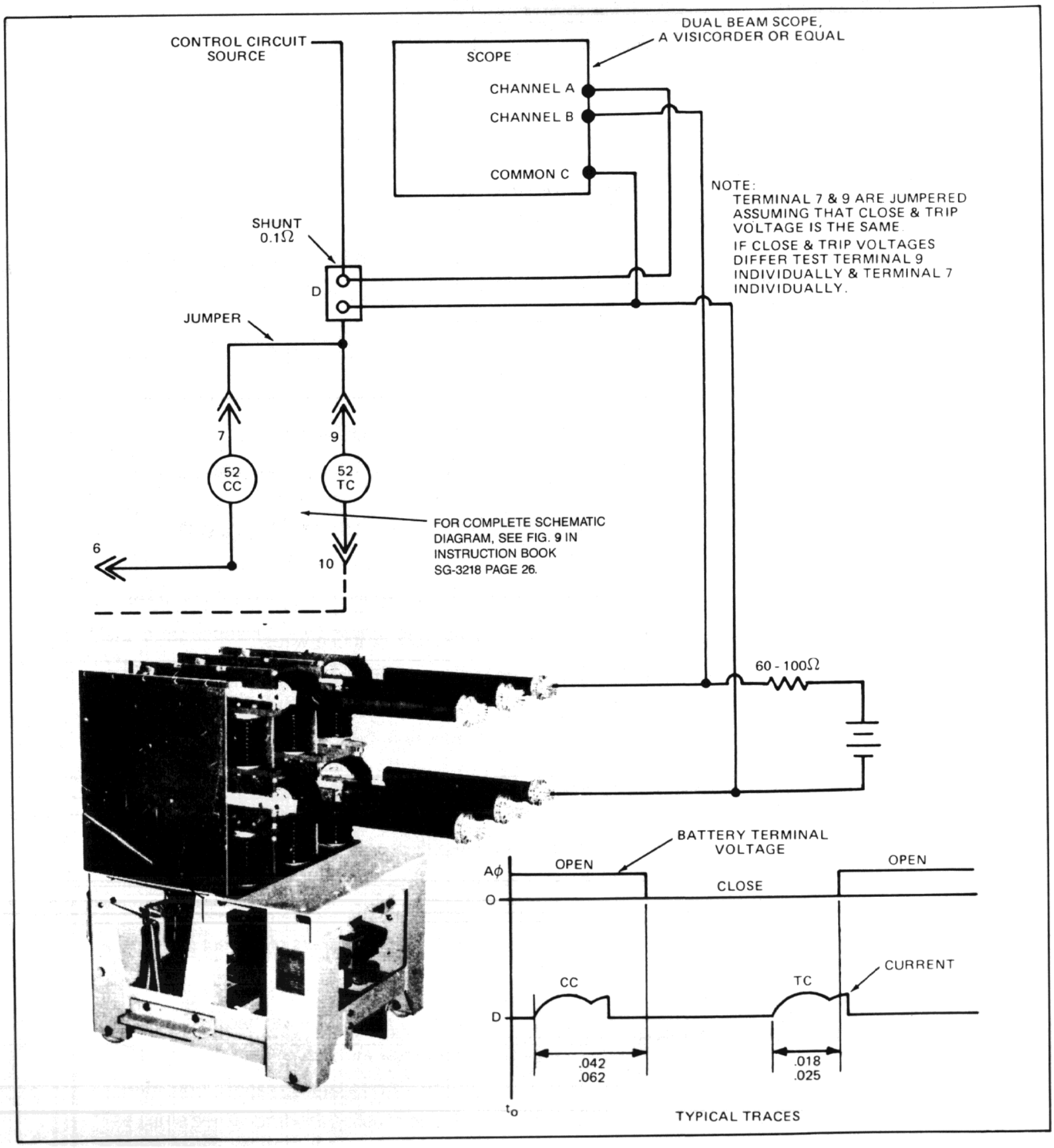

Method for Checking Opening and Closing Times FCV-500 or FCV-750 Vacuum Circuit Breaker

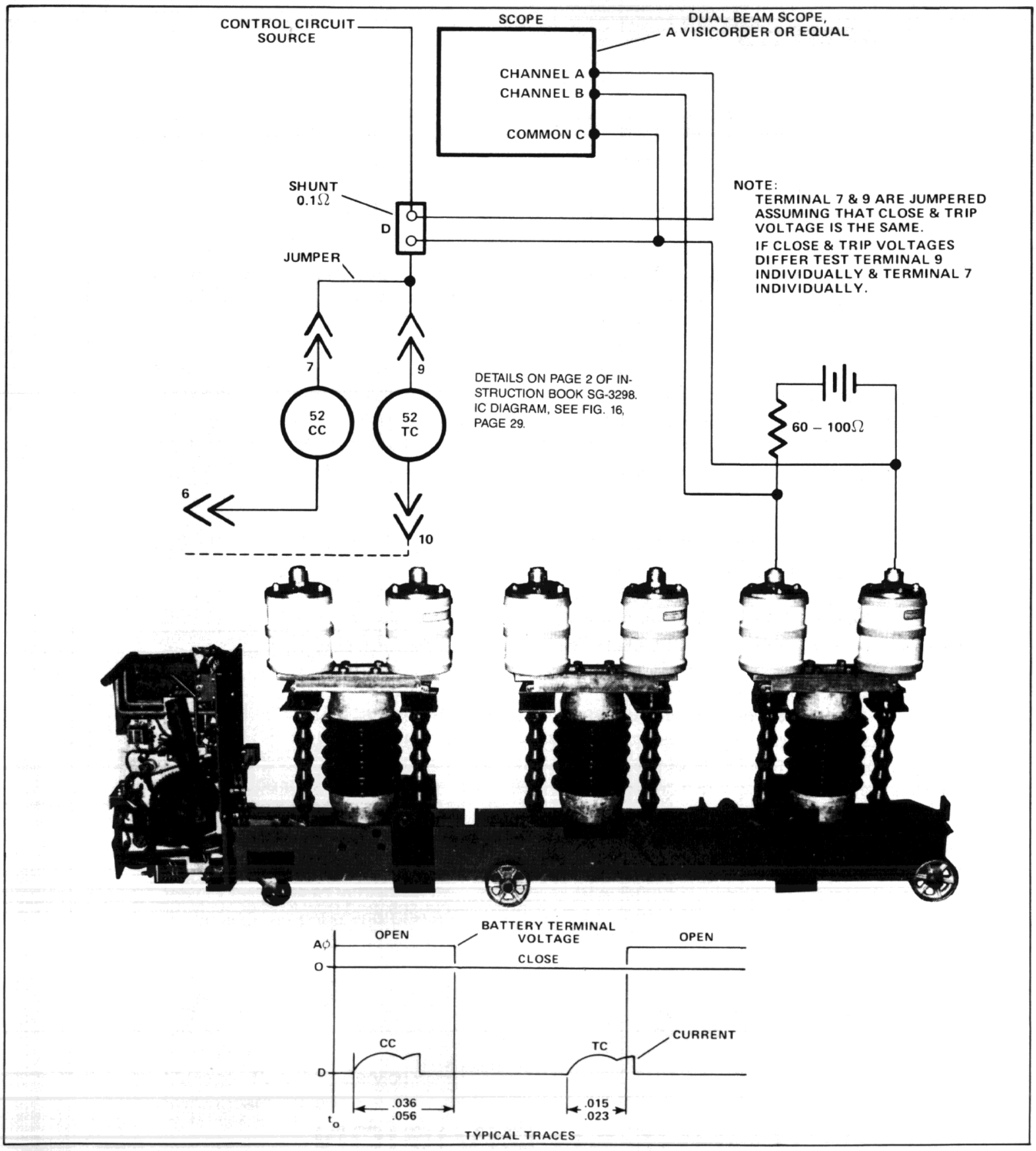

Method for Checking Opening and Closing Times VV-1500 Vacuum Circuit Breaker

SIEMENS

SERVICE TIPS

Circuit Breakers In Corrosive Environments

Unfortunately the term environment has been tied into so many controversial discussions that is it almost considered a dirty word and for some it may be a taboo. In this Service Tips communication the term will be accepted for what it is and an attempt will be made to tie it down to specifics.

Corrosion problems in electrical equipment, such as switchgear, are primarily caused by the chemical reaction of hydrogen sulfide, or free sulphur acting upon plated contacts, usually silver. There are other contaminants which are often present in many types of industrial environments such as ammonia, sulphur dioxide, chlorine, and nitrogen peroxide. Any or all of these can react adversely on contacts and other plated current carrying parts.

Do you have any of the above contaminants in the environment surrounding your electrical equipment?

If your answer is yes, we have a message here and it could prove very beneficial to you. It will be well worth your time to consider the points offered and to be guided accordingly.

Over the past several years our design engineers have researched the problem of corrosion and various methods of minimizing the chances of having tarnish build up on contacts. A number of design improvements have come out of this research and we now want to bring these changes to your attention. In most cases your equipment can be upgraded and it can be done at a price which will be small indeed when **you can minimize the chances of having an unscheduled outage.**

The attached product technical data publication, 18C5150-03, "Corrosion of Electrical Contacts" is a good discussion of the problem, its causes, and how to effectively minimize corrosion problems in the field.

SWITCHGEAR DIVISION

You will note that we now specify a special contact lubricant to protect contact surfaces from corrosive elements. This is in place of the graphite we formerly used. We ask that any Allis-Chalmers Switchgear instruction book which you have calling for graphite be corrected to call for the contact lubricant. In making this change you must also recognize and adhere to the contact pressures called for at the hinge joints under this improved lubrication system on all Siemens (formerly Allis-Chalmers and Siemens-Allis) breakers 5kV through 15kV, air magnetic type.

Air Magnetic Breaker Class	Pounds Pull On Blade: With Graphite	Pounds Pull On Blade: With Contact Lube
5kV	7-9 Lbs.	4-6 Lbs.
6.9 thru 15kV	5-7 Lbs.	2-4 Lbs.

Be sure of your lubrication in the hinge joints before making a change.

See the attached lubrication chart 18×4841-03 for 5kV and 5kV breakers having Type SE-3, SE-4 or solenoid operators. For the latest design 515 operators the chart is included in the applicable instruction books. The chart for low voltage breakers which shows the latest breaker is still typical of the areas which require care in lubrication.

For all older breakers (pre-1973) which are in corrosive environments and exhibiting potential problems we recommend replacing all current carrying parts with reconditioned, or new, components which are plated and lubricated in accordance with our present practice. Replacement of only the parts which appear to be failing only defers the ultimate failure. In order to insure proper adherence to specifications the parts should be sent back to the factory for reprocessing. One method of handling this rework program would be to buy sufficient new parts to rework two (2) or more breakers and the corresponding cubicle stationary contacts. Return parts removed which are salvagable to the factory for re-processing. When re-processing parts are received, go on to the next 2 or 3 breakers and repeat the process until entire installation has been upgraded. In no case should graphite be used in the rebuilding process.

If you are now interested in equipment we suggest you contact the local Siemens-Allis Sales Office in your area.

We will be pleased to discuss this program in detail and will upon your request offer a quotation on price and delivery of material desired.

R. Steenweg
Manager, Parts and Service
Switchgear Division

Attachment
Reprinted February, 1978
Page -2-

SIEMENS
Switchgear Division

product technical data

Corrosion Of Electrical Contacts

Introduction

Metal-clad and metal-enclosed switchgear is regularly applied in all types of industrial environments. Certain contaminants in the air can be very detrimental to reliable equipment performance if the appropriate precautions are not taken, both in the design of the switchgear and in its regular maintenance.

The principal problem areas are centered around the contact surfaces: breaker main contacts and hinge joints, and breaker/cubicle primary disconnect assemblies. These components are all heavy section copper normally plated with pure silver. Corrosion or mechanical damage to these contact surfaces can result in increased electrical resistance, overheating, and eventual failure.

Causes Of Corrosion

The corrosion problems in switchgear are primarily caused by the chemical reaction of hydrogen sulfide, or free sulfur, with the metal contact materials, usually silver. The result is the buildup of a tarnish film of silver sulfide. Other pollutants commonly present in industrial atmospheres may include ammonia (NH_3), sulfur dioxide (SO_2), chlorine (Cl), and nitrogen peroxide (NO_2). All of these can also adversely react with the contact materials to form corrosion compounds.

The severity rate of tarnishing, or corrosion, is further influenced by the concentration of the pollutant, the temperature of the materials, and the presence of moisture. Concentrations of the compounds mentioned above are currently being noted in the range of 500-1000 parts per billion in industrial atmospheres; in the case of sulfur the increase in concentrations in the past decade has been 4 orders of magnitude. Typical operating temperatures for switchgear contacts are in the range of 100 degC and have tended to increase in recent years with the advent of better electrical insulations. The presence of moisture in equipment is almost unavoidable; it allows the formation of a variety of acids which can attack the copper and silver contact materials.

Effects On Switchgear Contacts

The visible evidence of corrosion in switchgear is very easy to recognize; the silver tarnish on contacts is a dull gray or black coating over the usual bright silver surface. Many of the salts of copper which are likely to be formed exhibit the characteristic green color. Other metallic salts will show as white granular deposits.

Formation of tarnish on contact surfaces almost invariably increases the local contact electrical resistance, as most of the corrosion products, and tarnish films, are electrical insulators, or at best semi-conductors. The resulting increase in resistance causes localized heating in the region of the contact spot; this in turn increases the rate of corrosion leading to even greater losses.

As excessive temperatures are reached, the contact backup springs may lose their temper and relax, localized contact melting begins, and if the heat which is produced cannot be suitably dissipated thermal runaway occurs followed by complete destruction of the contact structures.

Minimizing Corrosion By Design

In order to continually improve switchgear in the face of increasing concentrations of pollutants in the atmosphere, Siemens-Allis has continuously evaluated various materials and processes for use in critical contact designs. Recent efforts in this field have led to three basic design revisions affecting various components of the 600-volt, 5 kV, and 15 kV product lines:

Silver-plated contacts—All circuit breaker contact fingers are now electro-plated with a thick deposit (0.001″) of silver applied under carefully controlled conditions to insure a dense, non-porous film. This applies to all primary disconnect fingers, main and hinge contact fingers on all circuit breakers. Many investigations have verified that pure silver is still unexcelled in these high pressure, high current density applications. All the alternates fail to do the job: gold, tin, cadmium, nickel. The elimination of porosity in the plating prevents any corrosion of the underlying copper, and the thick film insures good life under conditions of mechanical abrasion on sliding contacts.

Back-up springs—To produce a wider margin of safety in primary disconnect assemblies, we have instituted the use of back-up springs made from 17-7PH stainless steel in place of the traditional music wire or 18-8 stainless. Type 18-8 stainless, at 80 kpsi, exhibits a 9% loss of load at 290 degC; this compares to a 200 degC limit for music wire for the same loss of load. A significant further improvement is obtained with 17-7PH: only a 3.8% loss of load at 290 degC, 80 kpsi stress level.

Protection from tarnish—Considerable experimental research has established that protection of critical contact surfaces from corrosive elements is the most effective deterrent to problems. A good protective grease will not only shield surfaces from corrosive attack, but it will also increase the wear life of sliding contacts.

The choice of a grease suitable for the application must consider several important properties of the material. Ability to withstand operating temperatures (above 100 degC) without decomposition, chemical stability in the expected atmospheres, electrically non-conducting, chemically neutral to silver and retention on vertical surfaces at high temperatures are all important considerations.

Siemens-Allis Electrical Contact Lubricant—After several years of research, investigation and test, Siemen-Allis has developed a contact lubricating material which fulfills all the needs outlined above. This program includes evaluations of 14 candidate materials, with evaluations for 28 days at 120 degC including: a) weight and color change; b) oil separation; c) evaporation; d) adhesion to glass; e) tarnish protection of silver against 5-20 ppm H_2S. The finally selected material was successfully subjected to additional tests, all at elevated temperatures: a) thermal stability in air; b) thermal stability with H_2S; c) thermal stability of the total system including silver, grease, air, moisture, and H^2S. As a result, the use of Siemens-Allis Electrical Contact Lubricant has been made a standard factory procedure on all main current-carrying contacts.

Minimizing Corrosion In The Field

There are two factors which are the key to minimizing operating problems caused by contact corrosion:

Preventive maintenance—All main contact sliding surfaces and disconnect fingers should be inspected regularly, with a maximum interval between inspections of 12 months. In applications where it is known that duty is unusually severe, or corrosive elements are present, the inspection interval should be decreased accordingly.

Application of grease—At each maintenance inspection all of the old grease should be wiped off of the contacts and new lubricant applied to all sliding surfaces. Apply the material in a layer between 1/32″ and 1/16″ thick. Use only Siemens-Allis Electrical Contact Lubricant, part No. 15-171-370-002, available in 8 oz. tubes.

Circuit Breaker Lubricating Instructions

Periodic inspection of each circuit breaker is recommended at least once a year.

More frequent inspections are recommended, if severe load conditions, dust, moisture, or other unfavorable conditions exist.

Always inspect a breaker which has interrupted a heavy fault current.

During an inspection the breaker should be checked for proper operation, adjustment and lubrication. Adjustment procedures are described in the instruction book. Recommended lubrication points are shown in adjacent chart.

The lubrication chart outlines two methods of lubrication. The first method requires no disassembly and is suggested for the prevention of problems which could be created by severe environmental or operating conditions.

The second method follows a procedure similar to that performed on the breaker at the factory and should be used only in case of a general overhaul or disassembly.

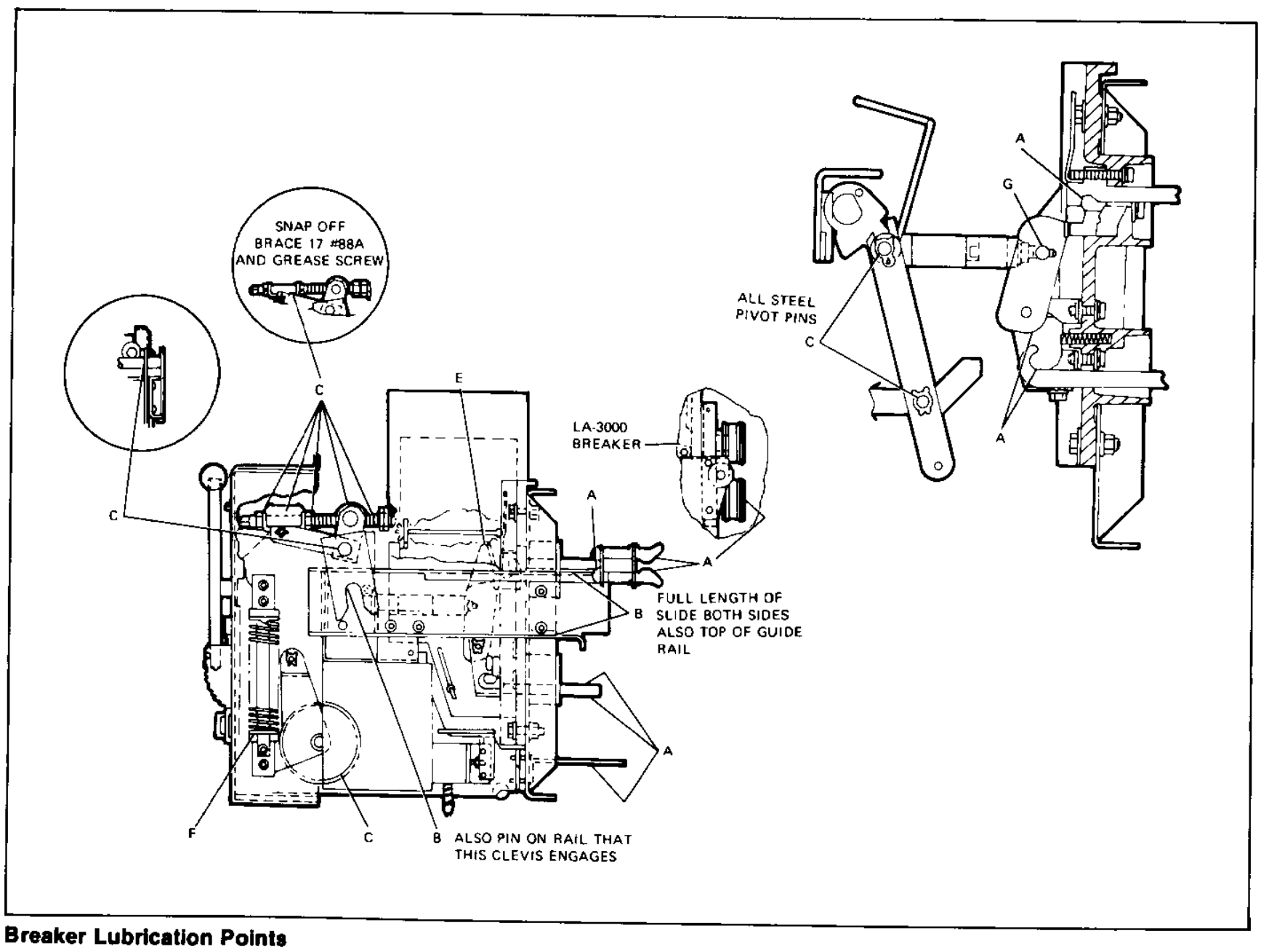

Breaker Lubrication Points

Method For Cleaning Bearings On Older Style Breakers Having Needle Or Sleeve Bearings

Needle bearings are factory lubricated for life and should not require attention. However, the best of greases are affected by time and atmospheric conditions and may require service.

To lubricate these bearings when parts are disassembled, the following procedure is recommended: Clean in solvent, wash in alcohol, spin in light machine oil, drain and repack with Beacon P-325 grease. *Caution: Needle bearings should not be removed from the retaining part.*

The sleeve bearings should be removed, washed in clean solvent, drained and dried thoroughly before lubricating with Beacon P-290.

Lubrication Chart

Lubrication Key	Part Description	Suggested Lubrication At Every * Operations Or Every Six Months	Lubrication (Requires Disassembly) Recommended Every 5 Years Or Any Complete Overhaul
A	Contact Arm Hinge Assembly. Primary disconnect fingers, ground contact. Secondary disconnect fingers.	Wipe Clean and Apply a Film of Siemens Contact Lubricant 15-171-370-002 in Layer 1/32″ to 1/16″ thick.	
B	Sliding Surfaces	Light application of *Molycote 557*	Wipe clean and apply *Molycote 557* liberally
C	Pivot pins, rotating parts such as drive pinion, gear.	Light application of *Molycote Penelube* 15-171-270-002.	Remove pins or bearings, clean per instructions and apply *Beacon P-290* 00-337-131-001.
D	Ground surfaces such as latches, rollers, props, etc.	Wipe clean and spray with *Molycote 557* 15-171-270-001.	Wash clean and spray with *Molycote 557* 15-171-270-001.
E	Arcing contacts.	Do not lubricate.	Do not lubricate.
F	Springs.	No lubrication required	
G	Dry pivot points.	No lubrication required.	No lubrication required.

*Lubrication should be checked and renewed as follows:

LA-600 operations between lubrications 1750
LA-1600 operations between lubrications 500
LA-3000, LA-4000 operations between lubrications 250

Circuit Breaker With SE-3 or SE-4 Operator Lubricating Instructions

Periodic inspection of each circuit breaker is recommended at least once a year

More frequent inspections are recommended, if severe load conditions, dust, moisture, or other unfavorable conditions exist.

Always inspect a breaker which has interrupted a heavy fault current.

During an inspection the breaker should be checked for proper operation, adjustment and lubrication. Adjustment procedures are described in the instruction book. Recommended lubrication points are shown in adjacent chart.

The lubrication chart outlines two methods of lubrication. The first method requires no disassembly and is suggested for the prevention of problems which could be created by severe environmental or operating conditions.

The second method follows a procedure similar to that performed on the breaker at the factory and should be used only in case of a general overhaul or disassembly.

Method For Cleaning Bearings

Needle and roller bearings are factory lubricated for life and should not require attention. However, the best of greases are affected by time and atmospheric conditions and may require service.

To lubricate these bearings when parts are disassembled, the following procedure is recommended: Clean in solvent, wash in alcohol, spin in light machine oil, drain and repack with Beacon P-325 grease. *Caution: Needle bearings should not be removed from the retaining part.*

The sleeve bearings should be removed, washed in clean solvent, drained and dried thoroughly before lubricating with Beacon P-290.

Lubrication

5 & 15 kV
Air Magnetic Circuit Breakers

Lubrication Chart (See Figure 1 through 5)

Lubrication Key	Part Description	Suggested lubrication at every 2000 operations or once every year.	Alternate lubrication (Requires disassembly) recommended after every 10,000 oper.
A	Ground surfaces such as latches, rollers, props, etc.	Wipe clean and spray with *Molycote 557* 15-171-270-001.	Wash clean and spray with *Molycote 557* 15-171-270-001.
B	Nylon sleeve bearings, such as: The contact arm hinge pin.	No lubrication required.	No lubrication required.
C	Sleeve bearings and pivot pins, rotating parts such as drive pinion, driving cranks, walking beam pivot pin, slide and pivot pin.	Light application of *Molycote Penelube* 15-171-270-002.	Remove pins or bearings, clean per instructions and apply *Beacon P-290* 00-337-131-001.
D	Sliding surfaces such as: The main solenoid armature.	Light application of *Molycote 557*.	Wipe clean and apply *Molycote 557* liberally.
E	Air puffer cylinders.	Wipe clean and apply transformer oil #3 to felt.	Wash clean and wet felt ring in transformer oil #3.
F	Roller and needle bearings.	No lubrication required.	Clean per instructions and repack with *Beacon P-325*.
G	Dry pivot points.	No lubrication required	No lubrication required.
H	Primary disconnect fingers, grounding contact.	Wipe clean and apply a film of Siemens contact lubricant 15-171-370-002.	
I	Arcing contacts.	Do not lubricate.	Do not lubricate.
J	Contact arm hinge assembly, silver washer between bushing and the contact arm	Wipe clean and apply a film of Siemens contact lubricant 15-171-370-002.	
K	Charging springs & spring retainers.	No lubrication required.	Wipe clean and coat with Beacon P-325.

18x4841-03

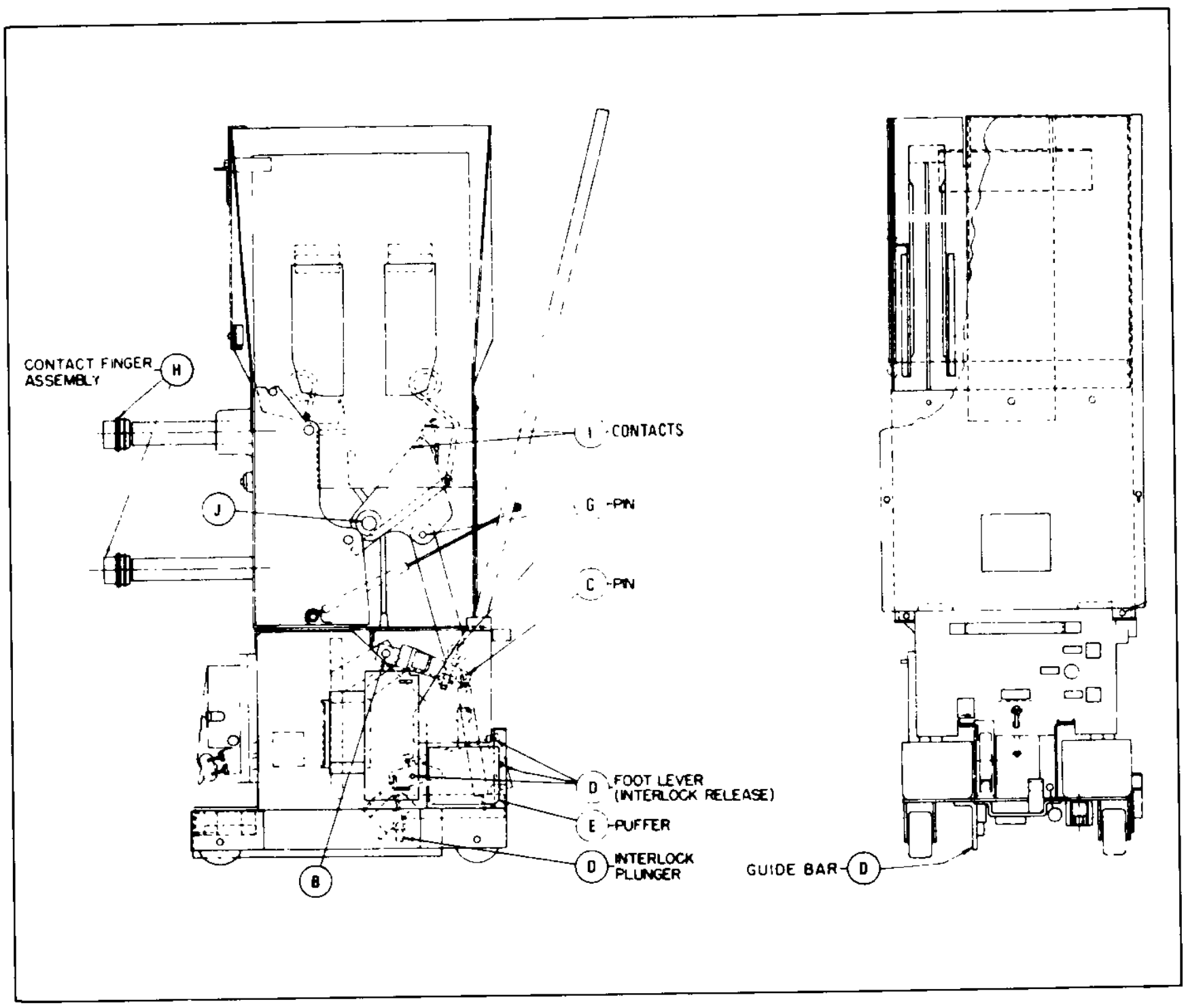

Figure 1. Typical 5 kV Breaker

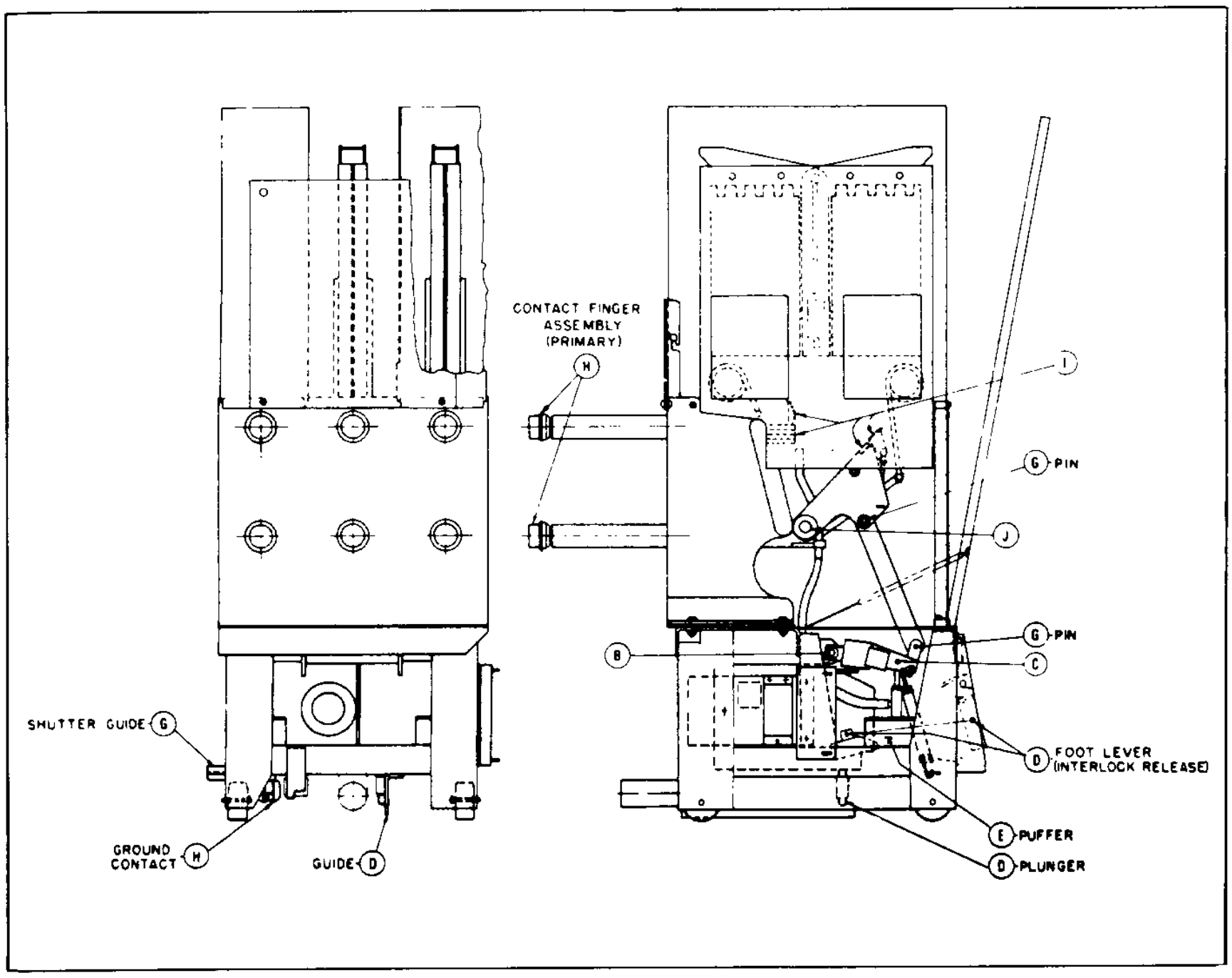

Figure 2. Typical 15 kV Breaker

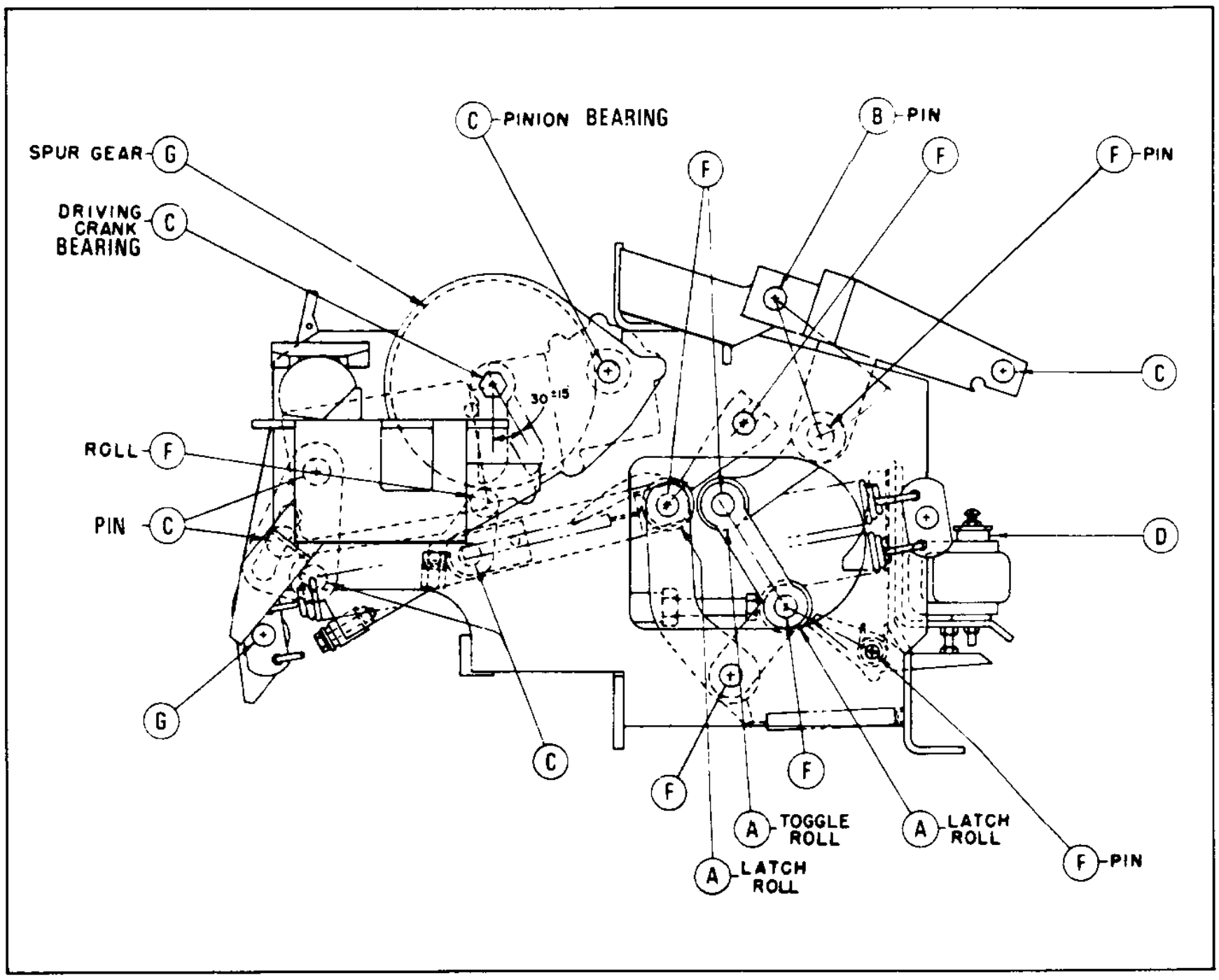

Figure 3. Stored Energy Operator for 5 kV Breaker

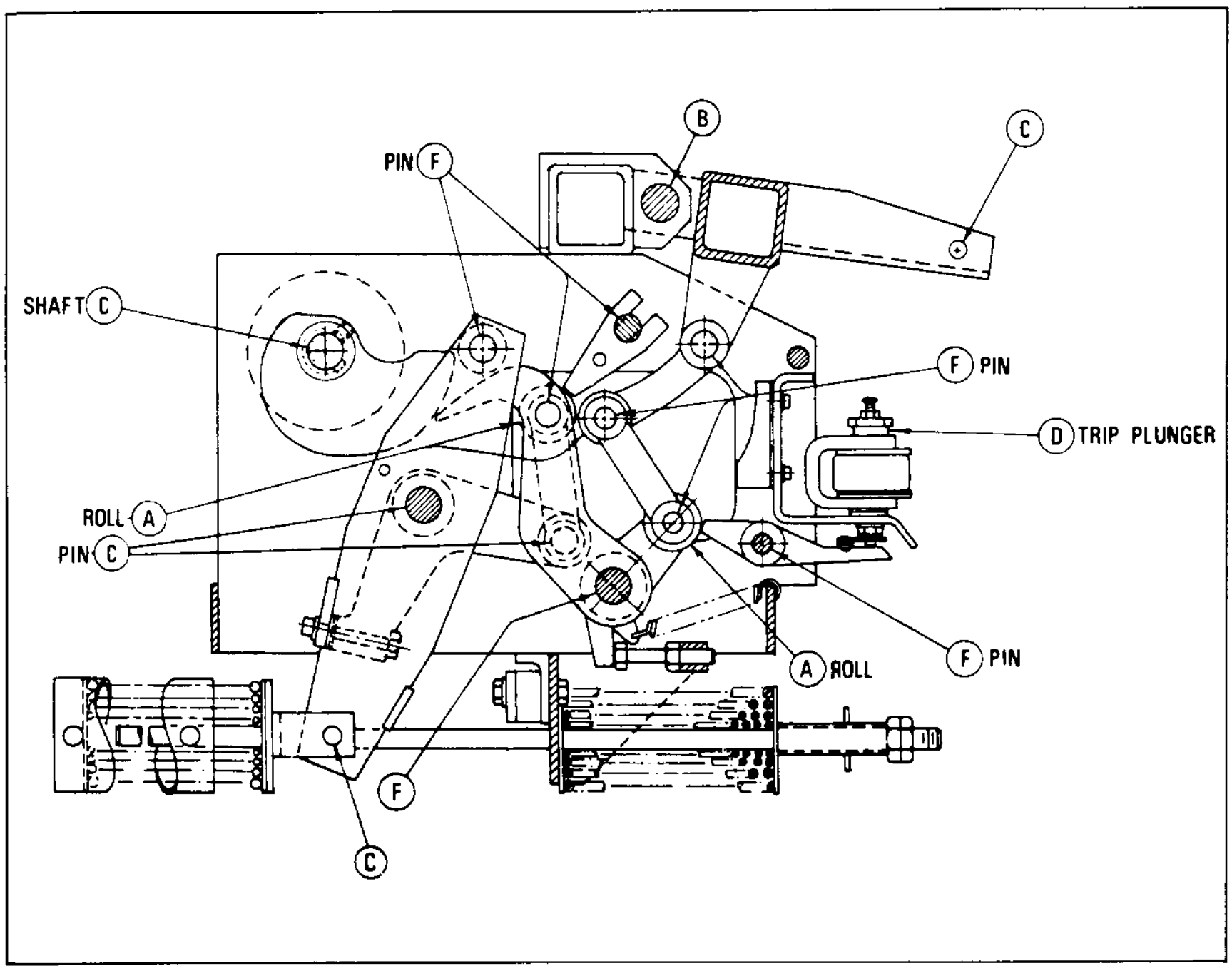

Figure 4. Stored Energy Operator for 15 kV Breaker

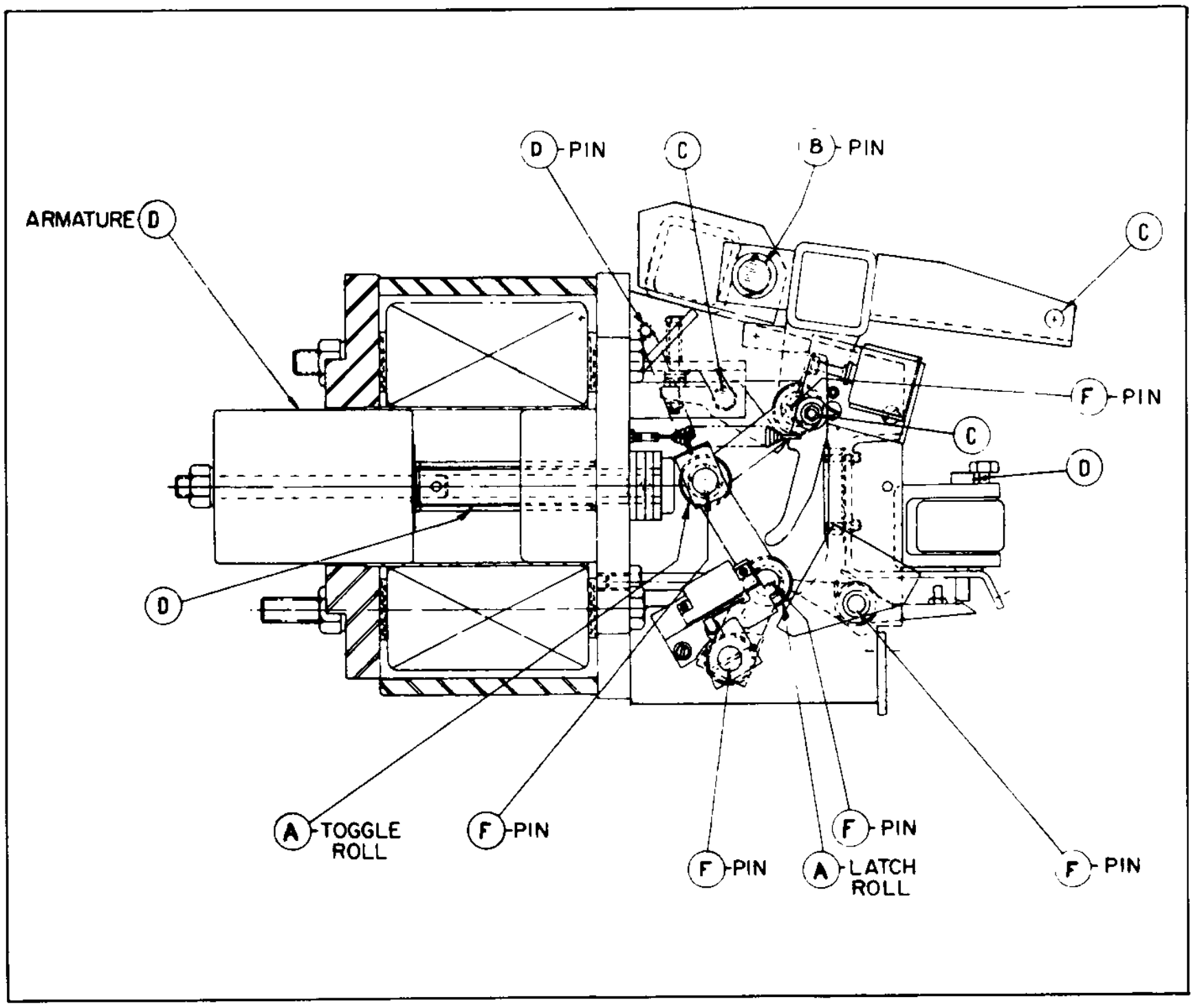

Figure 5. Typical Solenoid Operator Assembly for 5 & 25 kV Breakers

Lubrication

5 & 15 kV Air Magnetic Circuit Breakers
With Model 515 Operators

Basic Requirements

Periodic inspection of each circuit breaker is recommended at least once a year.

Most frequent inspections are recommended, if severe load conditions, dust, moisture, or other unfavorable conditions exist.

Always inspect a breaker which has interrupted a heavy fault current.

During an inspection the breaker should be checked for proper operation, adjustment and lubrication. Adjustment procedures are described in the instruction book. Recommended lubrication points are shown in adjacent chart.

The lubrication chart outlines two methods of lubrication. The first method requires no disassembly and is suggested for the prevention of problems which could be created by severe environmental or operating conditions.

The second method follows a procedure similar to that performed on the breaker at the factory and should be used only in case of a general overhaul or disassembly.

Method For Cleaning Bearings On Older Style Breakers Having Needle Or Sleeve Bearings

Needle bearings are factory lubricated for life and should not require attention. However, the best of greases are affected by time and atmospheric conditions and may require service.

To lubricate these bearings when parts are disassembled, the following procedure is recommended: Clean in solvent, wash in alcohol, spin in light machine oil, drain and repack with Beacon P-325 grease. *Caution: Needle bearings should not be removed from the retaining part.*

The sleeve bearings should be removed, washed in clean solvent, drained and dried thoroughly before lubricating with Beacon P-290.

Lubrication

5 & 15 kV Air Magnetic Circuit Breakers
With Model 515 Operators

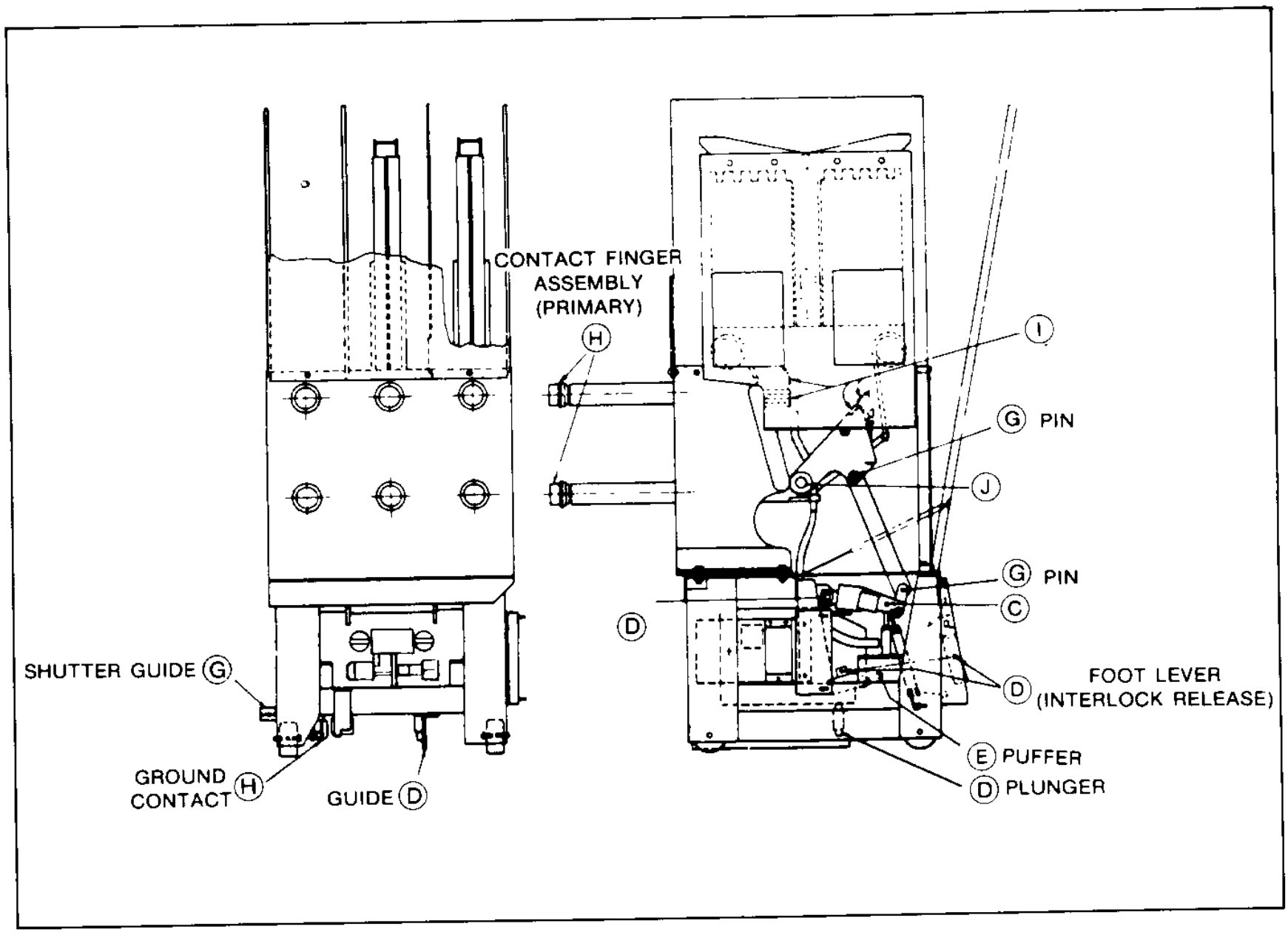

Lubrication Points on Breaker

Lubrication

5 & 15 kV Air Magnetic Circuit Breakers
With Model 515 Operators

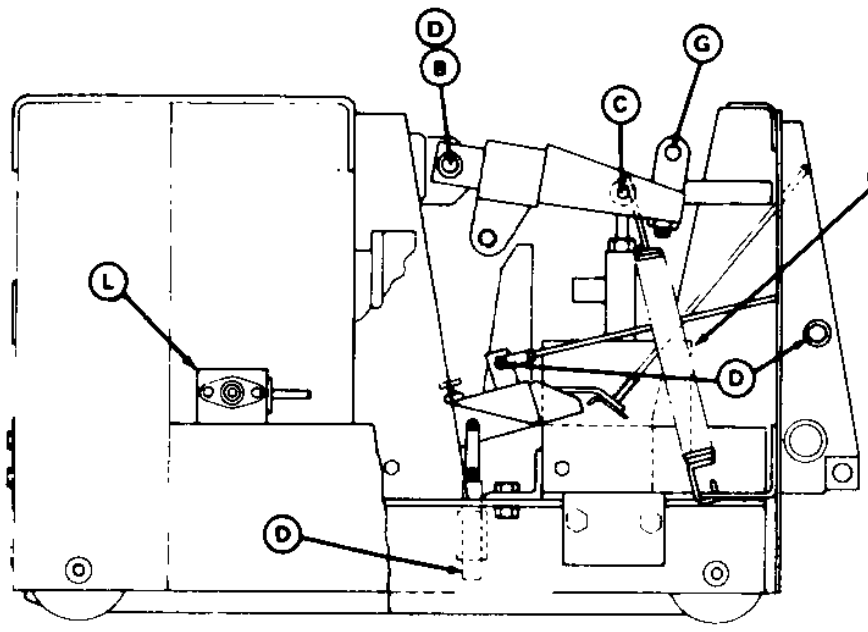

SIDE VIEW
"A"

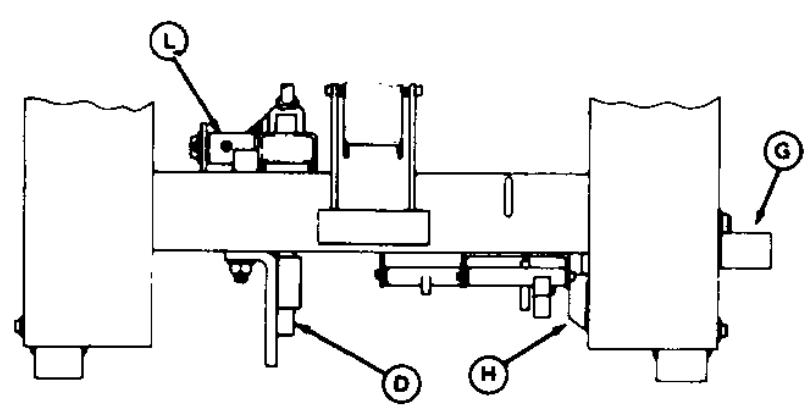

FRONT VIEW
"A"

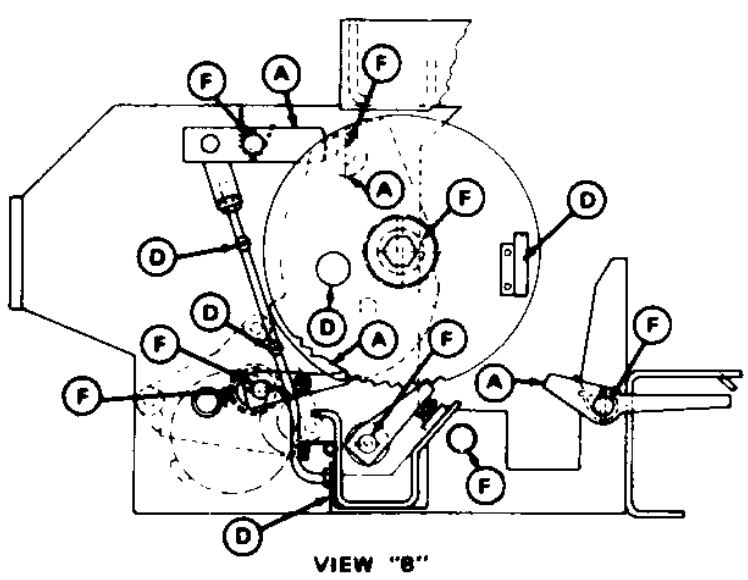

VIEW "B"

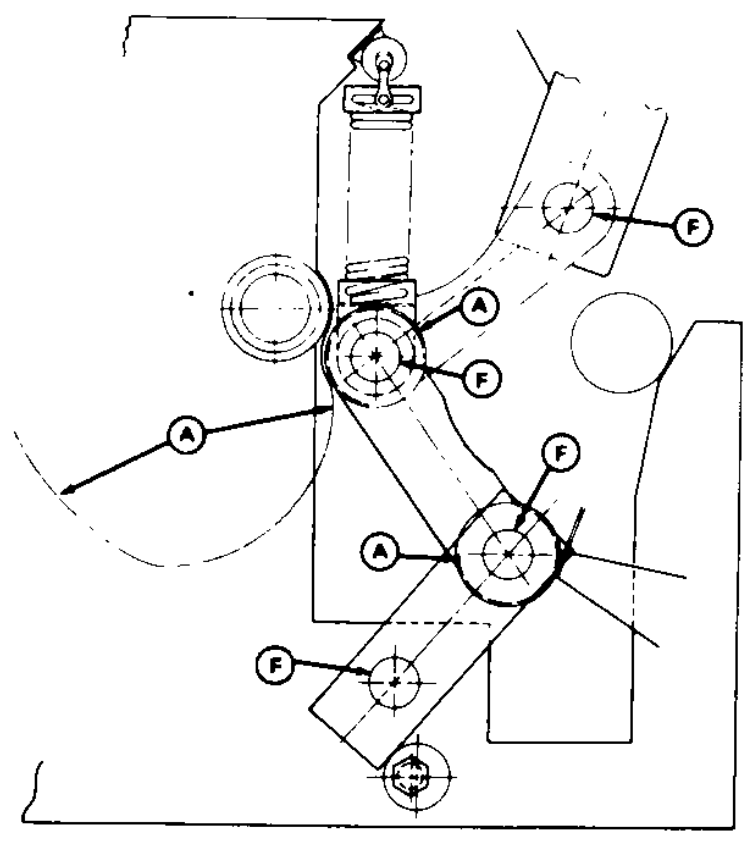

VIEW "C"

Lubrication Points on Frame and Operator (View A) Drive Assembly (View B) and Linkage Assembly (View C).

Lubrication

5 & 15 kV Air Magnetic Circuit Breakers
With Model 515 Operators

Lubrication Chart

Lubrication Key	Part Description	Suggested lubrication at every 2000 operations or once every year.	Alternate lubrication (Requires disassembly) recommended after every 10,000 oper.
A	Ground surfaces such as latches, rollers, props, etc.	Wipe clean and spray with *Molycote 557* 15-171-270-001.	Wash clean and spray with *Molycote 557* 15-171-270-001.
B	Nylon sleeve bearings, such as: the contact arm hinge pin.	No lubrication required.	No lubrication required.
C	Sleeve bearings and pivot pins, rotating parts such as drive pinion. driving cranks, slide and pivot pin.	Light application of *Molycote Penelube* 15-171-270-002.	Remove pins or bearings, clean per instructions and apply *Beacon P-290* 00-337-131-001.
D	Sliding surfaces	Light application of *Molycote 557*.	Wipe clean and apply *Molycote 557* liberally.
E	Air puffer cylinders.	Wipe clean and apply transformer oil #3 to felt 15-171-729-001	Wash clean and wet felt ring in transformer oil #3.
F	Roller and needle bearings	No lubrication required.	Clean per instructions and repack with *Beacon P-325*.
G	Dry pivot points.	No lubrication required.	No lubrication required.
H	Primary and secondary disconnect fingers, arcing contact hinge, grounding contact and aux. switch contacts.	Wipe clean and apply a film of Siemens contact lubricant 15-171-370-002.	
I	Arcing contacts.	Do not lubricate.	Do not lubricate.
J	Disconnect arm hinge assembly, silver washer between bushing and the contact arm.	Wipe clean and apply a film of Siemens contact lubricant 15-171-370-002.	
K	Charging springs & spring retainers.	No lubrication required.	Wipe clean and coat with *Beacon P-325.*
L	Manual charging bevel gear train, FB & FC series only.	Remove snap on cover & coat teeth lightly with *Beacon P-325.*	Remove snap on cover & coat teeth lightly with *Beacon P-325.* 15-337-131-001.
M assembly.	Arcing contact hinge	Wipe clean and apply a film of Siemens contact lubricant 15-171-370-002.	

Lubrication

34.5 kV VV-1500
Vacuum Circuit Breaker

Circuit Breaker Lubricating Instructions

Periodic inspection of each circuit breaker is recommended at least once a year

More frequent inspections are recommended, if severe load conditions, dust, moisture, or other unfavorable conditions exist.

Always inspect a breaker which has interrupted a heavy fault current.

During an inspection the breaker should be checked for proper operation, adjustment and lubrication. Adjustment procedures are described in the instruction book. Recommended lubrication points are shown in adjacent chart.

The lubrication chart outlines two methods of lubrication. The first method requires no disassembly and is suggested for the prevention of problems which could be created by severe environmental or operating conditions.

The second method follows a procedure similar to that performed on the breaker at the factory and should be used only in case of a general overhaul or disassembly.

Method For Cleaning Bearings On Older Style Breakers Having Needle or Sleeve Bearings.

Needle bearings are factory lubricated for life and should not require attention. However, the best of greases are affected by time and atmospheric conditions and may require service.

To lubricate these bearings when parts are disassembled, the following procedure is recommended: Clean in solvent, wash in alcohol, spin in light machine oil, drain and repack with Beacon P-325 grease. *Caution: Needle bearings should not be removed from the retaining part.*

The sleeve bearings should be removed, washed in clean solvent, drained and dried thoroughly before lubricating with Beacon P-290.

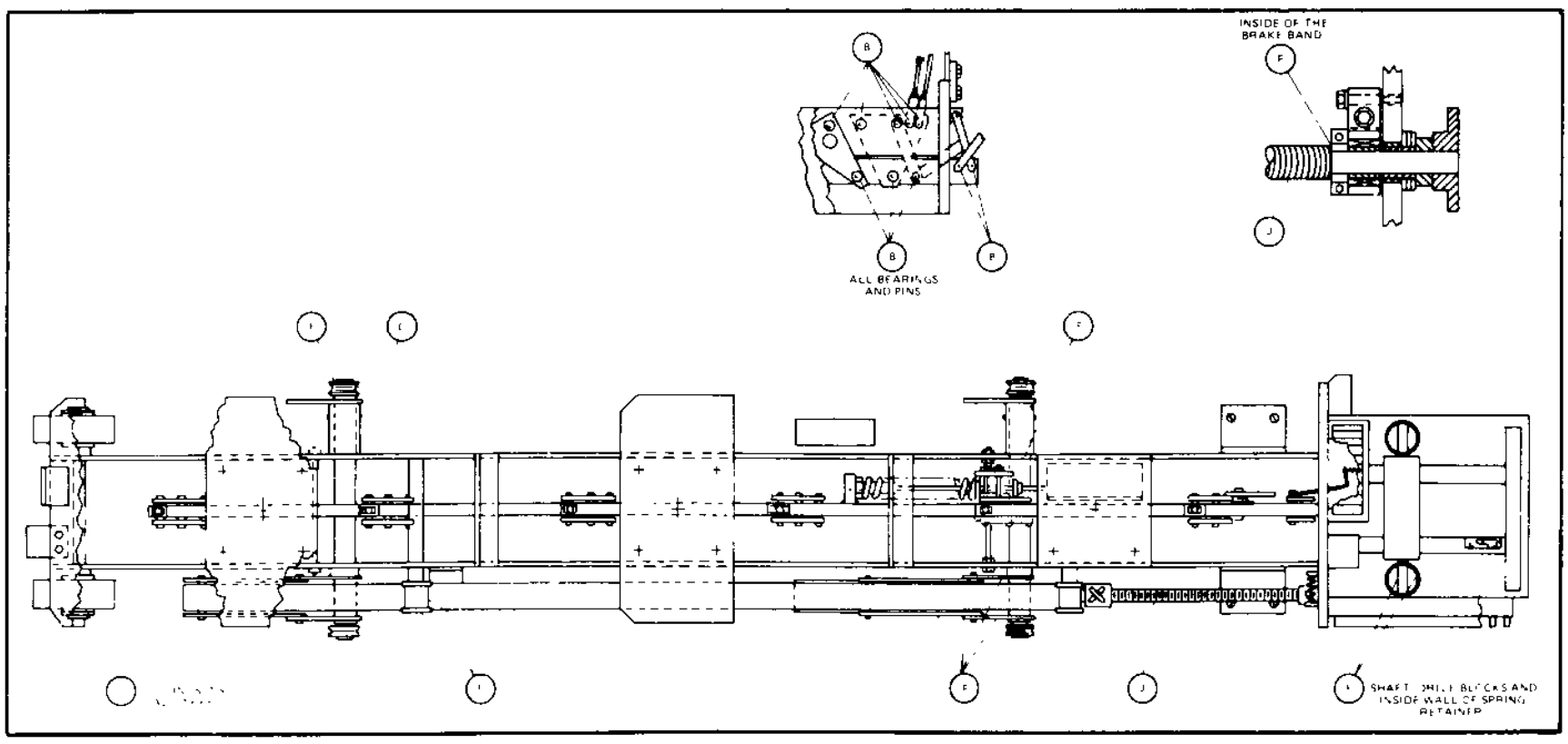

Lubrication Points on Truck Frame Assembly (Plan View) VV-1500 Vacuum Circuit Breaker

Lubrication

Figure 30. Lubrication Chart

Lubrication Key	Part Description	Suggested lubrication at every 1,000 operations or once every year.	Alternate lubrication (Requires disassembly) recommended after every 5,000 oper.
A	Ground surfaces such as latches, rollers, props, etc.	Wipe clean and spray with *Molycote 557* 15-171-270-001.	Wash clean and spray with *Molycote 557* 15-171-270-001.
B	Sleeve bearings and pivot pins, rotating parts such as bell cranks, drive bar.	Light application of *Molycote Penelube* 15-171-270-002.	Remove pins or bearings, clean per instructions and apply *Beacon P-290* 00-337-131-001.
C	Sliding surfaces	Light application of *Molycote 557*.	Wipe clean and apply *Molycote 557* liberally.
D	Sliding parts at vacuum interrupter.	Light application of *Beacon P-325*.	Light application of *Beacon P-325*.
E	Roller and needle bearings.	No lubrication required.	Clean per instructions and repack with *Beacon P-325*.
F	Wheels, shafts, drive blocks, spring retainer	Beacon P-290.	Beacon P-290.
G	Primary and secondary disconnect fingers. Grounding contact and auxiliary switch contacts.	Wipe clean and apply a thin film of Siemens contact lubricant 15-171-370-002.	
H	Charging springs and spring retainers	No lubrication required.	Wipe clean and coat with *Beacon P-325*.
J	Racking screw	Coat of light grade oil. #5 hydraulic fluid.	

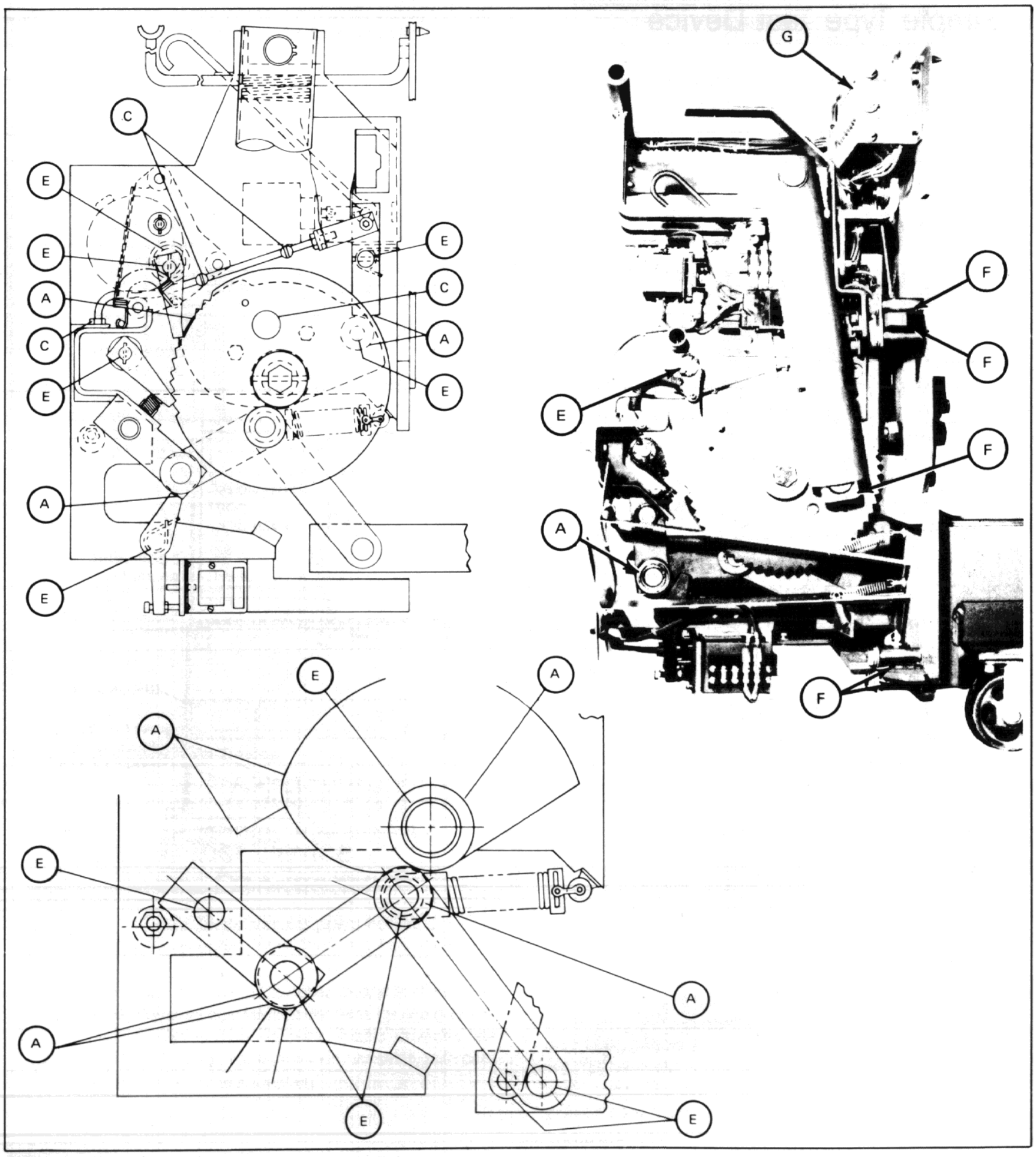

Lubrication Points VV-1500 Vacuum Circuit Breaker

Simple Type Test Device

Inserted into the circuit breaker cubicle, the test device is used for phasing out and potential testing of line and bus circuits. This device is furnished with either six studs or three interchangeable studs which can be used in either bus or line position. The studs terminate within the unit. Access to the stud terminals are through insulating doors. A ground bar on the front of the unit base allows connection of ground ties for grounding dead bus or feeder circuits for maintenance protection.

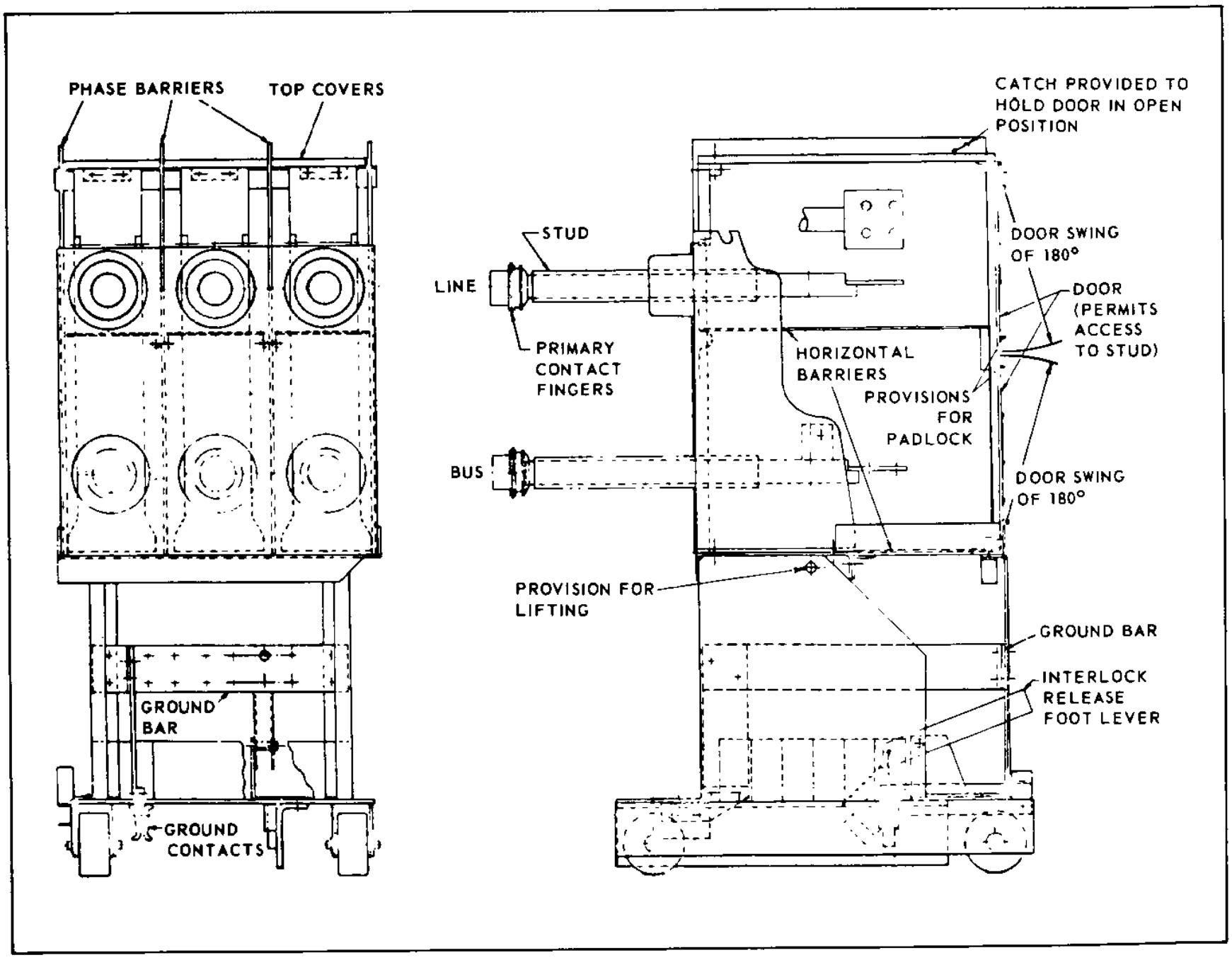

5 kV Simple Type Test Device

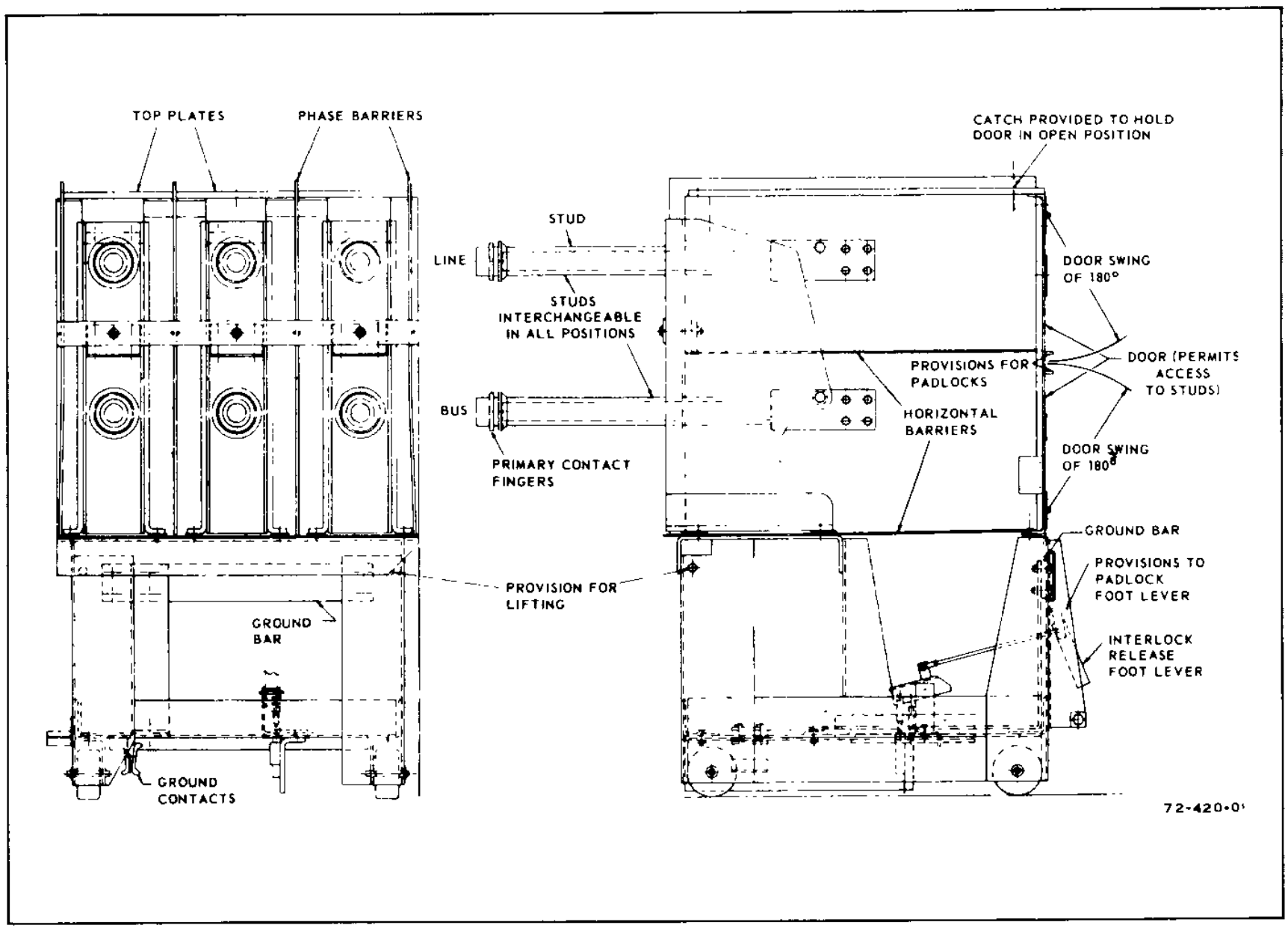

15 kV Simple Type Test Device

Ground & Test Device (Electrically Operated)

The ground and test device contains power-operated ground contacts for safely grounding either the line or bus. The power for grounding the contacts is supplied by a stored energy operator identical to a circuit breaker operator. It includes manually operated selector switch contacts for line grounding or ungrounded test connections. It also provides test ports and is interlocked to assure maximum safety with convenience of use in any test junction.

The selector switch is manually operated and can be operated only out of the cubicle. The power-operated ground switch is electrically closed from a remote push button station at the end of a 30-foot cable.

The unit is normally opened manually by unlocking the trip latch and pushing a release lever. (Optional electric tripping an be furnished.) Closing power is obtained through the cubicle secondary contacts (a separate power and control source is available as an option). The remote pushbutton station has two buttons in series to reduce possibility of accidental operation. Two sets of test ports, located on the front panel, provide easy access to the primary studs. The upper set of

three ports is direct-connected to the lower primary studs and the lower set is connected to the selector switch. This arrangement permits connection to bus or line, depending on switch position. Sliding doors over the ports isolate the primary studs not used in testing. Six test jacks or probes are provided to fit into the test ports and furnish easy connection of test equipment. The probe lug is sized to take up to #2 wire. three conditions of test port access are provided:

a. Line test or grounding—With the selector switch in line position, the selector ports can be exposed giving access to the line. Bus test ports are locked closed.

b. Bus test or grounding—With the selector switch in the bus position, the selector ports can be exposed giving access to the bus. Bus test ports are locked closed.

c. Ungrounded tests—With the selector switch in line position, and the ground switch locked open by transfer of the key from the interlock (at the back left of the operator) to the panel studs interlock, all six ports can be opened. (If the key is not inserted in the panel slide interlock, after withdrawal from the operator interlock, access is through the selector ports only and grounding is prohibited.) The selector ports can also be padlocked closed at any time.

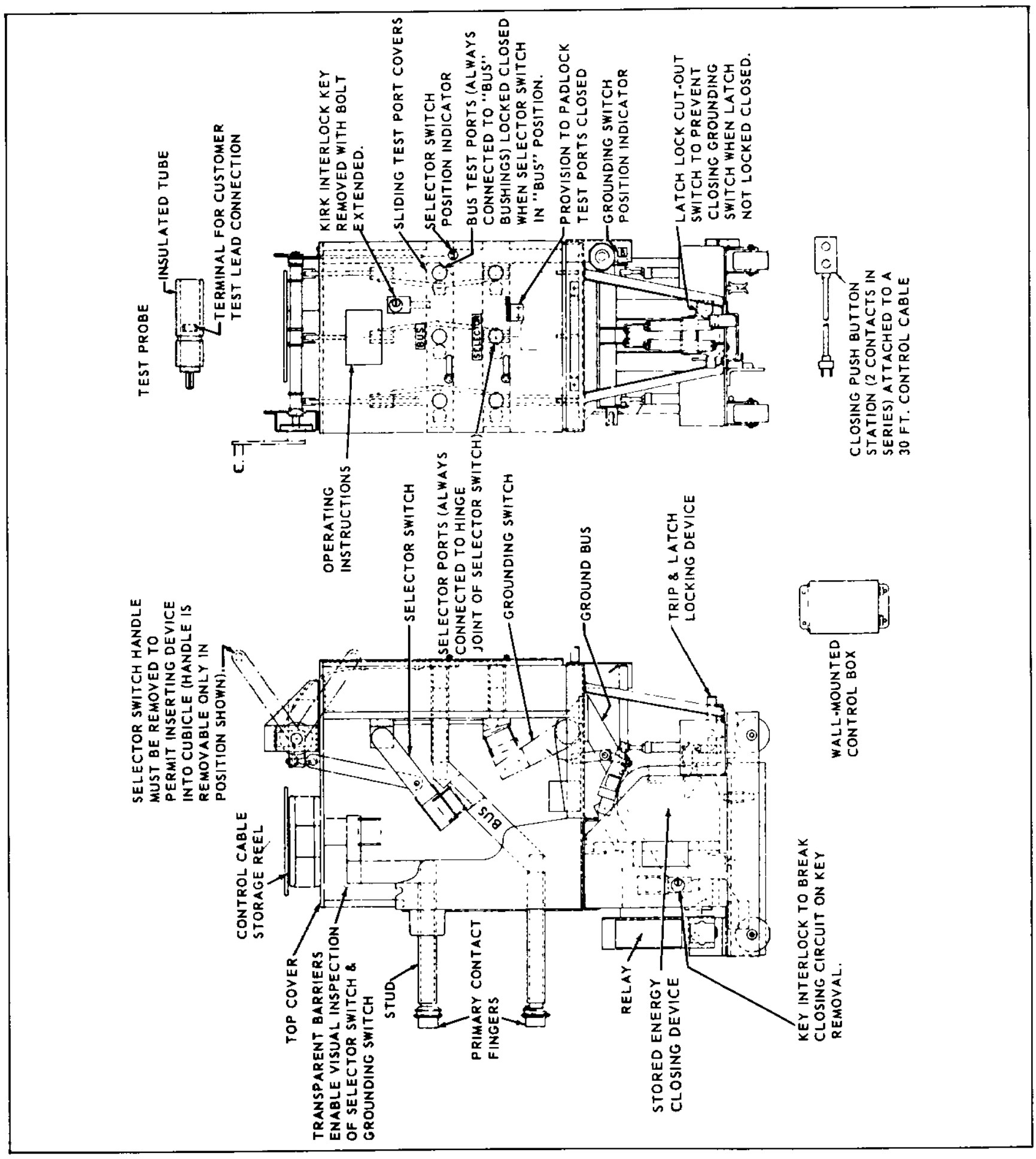

5 kV Ground and Test Device (Electrically Operated)

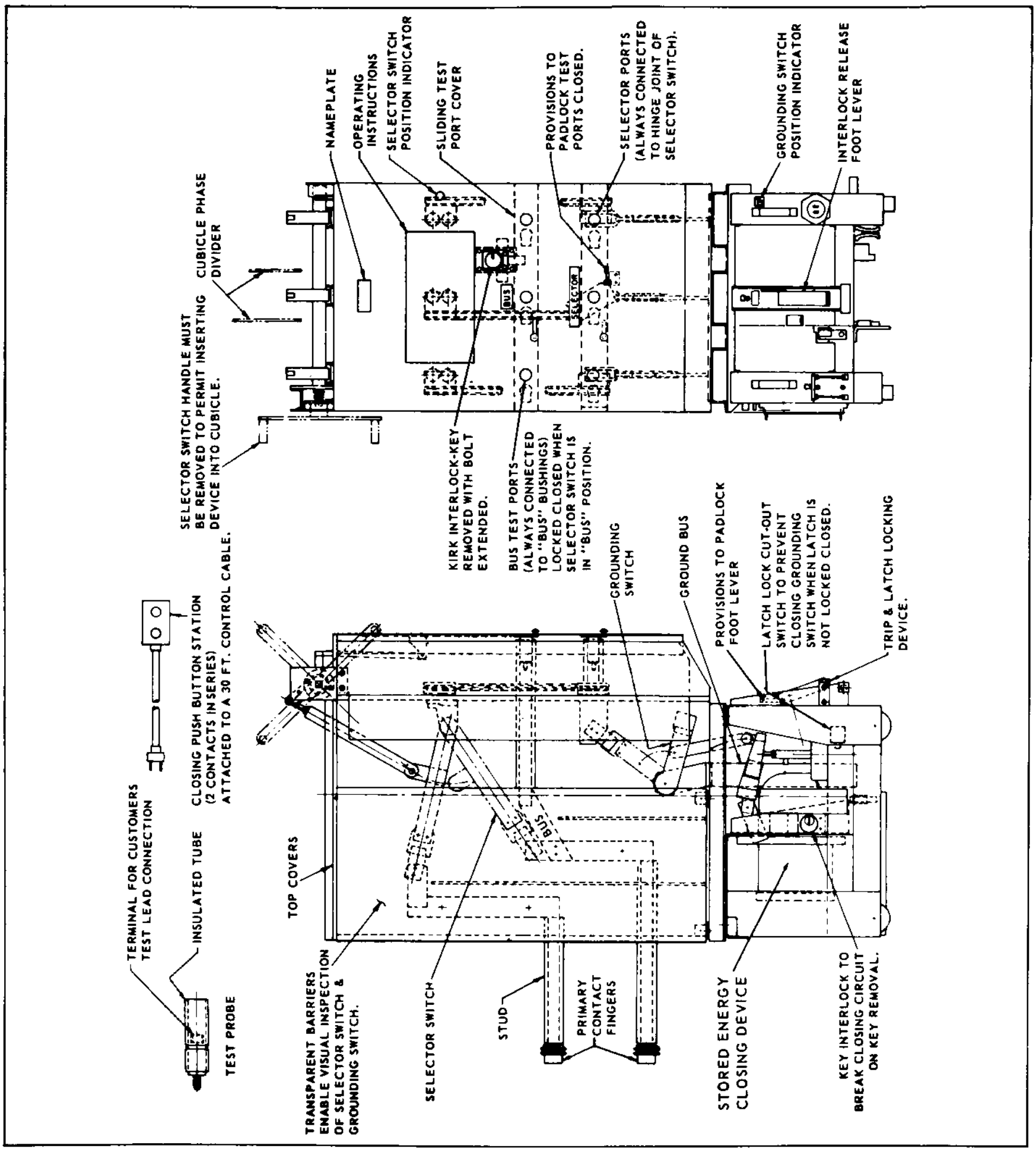

15 kV Ground and Test Device (Electrically Operated)

SIEMENS

Siemens-Allis, Inc.
Switchgear Division
P.O. Box 29503
Raleigh, NC 27626
(919) 365-6660

10/87 2M

PRINTED IN U.S.A.