# Altivar® 31

## Adjustable Speed Drive Controllers
## Variadores de velocidad ajustable
## Variateurs de vitesse

Programming Manual
Directives de programmation
Guide de programación

**Retain for future use. /**
**Conservar para uso futuro. /**
**À conserver pour usage ultérieur.**

a brand of Schneider Electric

Telemecanique

**Altivar® 31 Adjustable Speed Drive Controllers**

**Programming Manual . . . . . 5**

ENGLISH

**Variadores de velocidad Ajustable Altivar® 31**

**Manual de programación . . . . . .97**

ESPAÑOL

**Variateurs de vitesse Altivar® 31**

**Guide de programmation . . . . . 189**

FRANÇAIS

© 2004 Schneider Electric All Rights Reserved

ENGLISH

ESPAÑOL

FRANÇAIS


© 2004 Schneider Electric All Rights Reserved

ENGLISH

**SECTION 1: INTRODUCTION**

Product Range ..... 7
About This Document ..... 7
Hazard Categories and Special Symbols ..... 8
Product support ..... 8
Start-Up Overview ..... 9
Preliminary Recommendations ..... 10
Precautions ..... 10
Starting from Line Power ..... 11
Power Up after a Manual Fault Reset or Stop Command ..... 11
Test on a Low Power Motor or without a Motor ..... 11
Using Motors in Parallel ..... 11
Operation on an Impedance Grounded System ..... 11
Programming Recommendations ..... 11
Factory Settings ..... 12
Drive Thermal Protection ..... 13
Ventilation ..... 13
Motor Thermal Protection ..... 14

**SECTION 2: PROGRAMMING**

Drive Keypad Display ..... 15
ATV31•••••• Controllers ..... 15
ATV31••••••A Controllers ..... 16
Remote Keypad Display ..... 17
Saving and Loading Configurations ..... 17
Accessing the Menus ..... 18
Accessing the Parameters ..... 19
bFr Parameter ..... 19
Function Compatibility ..... 20
Logic and Analog Input Application Functions ..... 21

**SECTION 3: MENUS**

Settings Menu SEt- ..... 23
Drive Control Menu drC- ..... 27
I/O Menu I-O- ..... 31
Control Menu CtL- ..... 34
Control Channels ..... 34
Parameter LAC ..... 35
Parameter LAC = L1 or L2 ..... 36
Parameter LAC = L3 ..... 37
Reference Channel for LAC = L1 or ..... 39
Control Channel for LAC = L1 or L2 ..... 40
Reference Channel for LAC = L3 ..... 41
Control Channel for LAC = L3:
CHCF = SIM, Combined Reference and Control ..... 42
Control Channel for LAC = L3:
CHCF = SEP, Mixed Mode (Separate Reference and Control) ..... 43
Application Functions Menu FUn- ..... 48
Summing Inputs ..... 54
Preset Speeds ..... 55
+/- Speed ..... 59
PI Regulator ..... 62
Manual–Automatic Operation with PI Regulator ..... 64
Brake Control ..... 68
Management of Limit Switches ..... 74
Fault Menu FLt- ..... 76
Communication Menu COM- ..... 80
Display Menu SUP- ..... 82

© 2004 Schneider Electric All Rights Reserved

ENGLISH

**SECTION 4: MAINTENANCE AND TROUBLE-SHOOTING**

Precautions ..... 85
Routine Maintenance ..... 85
Fault Display ..... 85
Drive Controller Does Not Start, No Fault Displayed ..... 85
Clearing Faults ..... 86
Faults Which Cannot Be Automatically Reset ..... 86
Faults Which Can Be Automatically Reset ..... 87
Faults That Reset When the Fault Is Cleared ..... 88
Configuration Settings Tables ..... 88
Drive Controller and Customer ID ..... 89
1st level Adjustment Parameter ..... 89
Settings menu ..... 89
Drive Menu ..... 90
I/O Menu ..... 90
Control Menu ..... 90
Application Functions Menu ..... 91
Fault Menu ..... 93
Communication Menu ..... 93
Index of Parameter Codes ..... 94
Index of Functions ..... 95


© 2004 Schneider Electric All Rights Reserved

ENGLISH

# SECTION 1: INTRODUCTION

## PRODUCT RANGE

The Altivar 31 (ATV31) family of adjustable frequency AC drive controllers is used for controlling three-phase asynchronous motors. The controllers range from:

- 0.25 to 3 hp (0.18 to 2.2 kW), 208/230/240 V, single-phase input
- 0.25 to 20 hp (0.18 to 15 kW), 208/230/240 V, three-phase input
- 0.5 to 20 hp (0.37 to 15 kW), 400/460/480 V, three-phase input
- 1 to 20 hp (0.75 to 15 kW), 525/575/600 V, three-phase input

Some ATV31 controllers are available with a reference potentiometer, a run button, and a stop/reset button. These controllers are designated as ATV31••••••A controllers throughout this manual. The symbol "•" in a catalog number designates parts of the number that vary with rating.

## ABOUT THIS DOCUMENT

This manual contains programming instructions for ATV31 drive controllers. The following documentation is also provided with the controller:

- *Altivar 31 Installation Manual,* VVDED303041US
- *Altivar 31 Start-Up Guide,* VVDED303043US

Refer to the *ATV31 Installation Manual* for instructions on receiving, inspection, mounting, electrical installation, and wiring. Refer to the *ATV31 Start-Up Guide* for instructions on bringing the drive controller into service with the factory configuration.

Refer to the Index of Parameter Codes and the Index of Functions on pages 94–95 of for an alphabetical index of the codes and functions discussed in this manual.

*NOTE: Throughout this manual, and on the drive keypad display, a dash appears after menu and sub-menu codes to differentiate them from parameter codes. For example, SEt- is a menu, but ACC is a parameter.*

© 2004 Schneider Electric All Rights Reserved

ENGLISH

## HAZARD CATEGORIES AND SPECIAL SYMBOLS

The following symbols and special messages may appear in this manual or on the equipment to warn of potential hazards.

The addition of the lightening bolt or ANSI man symbol to a “Danger” or “Warning” safety label affixed to the equipment indicates an electrical hazard which will result in personal injury if the instructions are not followed.

The addition of the exclamation point symbol to a safety message in the manual indicates potential personal injury hazards. Obey all safety messages introduced by this symbol to avoid possible injury or death.

| Symbol | Name |
|---|---|
| | Lightening Bolt |
| | ANSI Man |
| | Exclamation Point |

**⚠ DANGER**

**DANGER** indicates an imminently hazardous situation which, if not avoided, **will result in** death or serious injury.

**⚠ WARNING**

**WARNING** indicates a potentially hazardous situation which, if not avoided, **can result in** death or serious injury.

**⚠ CAUTION**

**CAUTION** indicates a potentially hazardous situation which, if not avoided, **can result in** minor or moderate injury.

**CAUTION**

**CAUTION**, used without the safety alert symbol, indicates a potentially hazardous situation which, if not avoided, **can result in** property damage.

## PRODUCT SUPPORT

For support and assistance, contact the Drives Product Support Group. The Drives Product Support group is available 24 hours a day, 365 days a year. They can work with you over the telephone to diagnose application or product problems and to advise the correct course of action.

| | |
|---|---|
| Telephone | 919-266-8600 |
| E-mail | drivepsg@us.schneider-electric.com |
| Fax | 919-217-6508 |


© 2004 Schneider Electric All Rights Reserved

ENGLISH

## START-UP OVERVIEW

The following procedure is an overview of the minimum steps necessary for bringing an ATV31 drive controller into service. Refer to the *ATV31 Installation Manual* for the mounting, wiring, and bus voltage measurement steps. Refer to the appropriate sections of this manual for the programming steps.

1. Mount the drive controller. Refer to the *ATV31 Installation Manual*.
2. Make the following connections to the drive controller. Refer to the *ATV31 Installation Manual*:
   — Connect the grounding conductors.
   — Connect the line supply. Ensure that it is within the voltage range of the drive controller.
   — Connect the motor. Ensure that its rating corresponds to the drive controller's voltage.
3. Power up the drive controller, but do not give a run command.
4. Configure bFr (motor nominal frequency) if it is other than 50 Hz. bFr appears on the display the first time the drive controller is powered up. It can be accessed in the drC- menu (page 27) anytime.
5. Configure the parameters in the drC- menu if the factory configuration is not suitable. Refer to page 12 for the factory settings.
6. Configure the parameters in the I-O-, CtL-, and FUn- menus if the factory configuration is not suitable. Refer to page 12 for the factory settings.
7. Configure the following parameters in the SEt- menu (pages 23–27):
   — ACC (acceleration) and dEC (deceleration)
   — LSP (low speed when the reference is zero) and HSP (high speed when the reference is at its maximum)
   — ItH (motor thermal protection)
8. Remove power from the drive controller and follow the bus voltage measurement procedure in the *ATV31 Installation Manual*. Then connect the control wiring to the logic and analog inputs.
9. Power up the drive controller, then issue a run command via the logic input (refer to the *ATV31 Start-Up Guide*).
10. Adjust the speed reference.

© 2004 Schneider Electric All Rights Reserved

ENGLISH

## PRELIMINARY RECOMMENDATIONS

### Precautions

Before powering up and configuring the drive controller, read and observe the following precautions.

**⚠ DANGER**

**UNINTENDED EQUIPMENT OPERATION**

- Before powering up and configuring the drive controller, ensure that the logic inputs are switched off (State 0) to prevent unintended starting.
- An input assigned to the run command may cause the motor to start immediately upon exiting the configuration menus.

**Failure to follow these instructions will result in death or serious injury.**

**⚠ WARNING**

**LOSS OF CONTROL**

- The designer of any control scheme must consider the potential failure modes of control paths and, for certain critical control functions, provide a means to achieve a safe state during and after a path failure.
- Examples of critical control functions are Emergency Stop and Overtravel Stop.
- Separate or redundant control paths must be provided for critical control functions.

**Failure to follow these instructions can result in death, serious injury, or equipment damage.**

**CAUTION**

**DAMAGED EQUIPMENT**

Do not operate or install any drive controller that appears damaged.

**Failure to follow this instruction can result in equipment damage.**


© 2004 Schneider Electric All Rights Reserved

ENGLISH

### Starting from Line Power

If starting the drive controller from line power, limit operations of the line contactor to fewer than one per minute **to avoid premature failure of the filter capacitors and precharge resistors**. Use inputs LI1 to LI6 to control the drive controller. The motor thermal state memory returns to zero when line power is removed from the drive controller.

### Power Up after a Manual Fault Reset or Stop Command

With the factory configuration, when the drive controller is powered up after a manual fault reset or a stop command, the forward, reverse, and DC injection stop commands must be reset for the drive controller to start. If they are not reset, the drive controller will display nSt and will not start. If automatic restart is configured (parameter Atr in the FLt- menu, see page 77) the reset is not necessary.

### Test on a Low Power Motor or without a Motor

With the factory configuration, motor phase loss detection (OPL) is active. To check the drive controller in a test or maintenance environment without having to switch to a motor with the same rating as the drive controller, disable motor phase loss detection and configure the voltage/frequency ratio (UFt) to L, constant torque (see page 29). The drive controller will not provide motor thermal protection if the motor current is less than 0.2 times the nominal drive current.

### Using Motors in Parallel

When using motors in parallel, configure the voltage/frequency ratio, UFt, to L (constant torque) and provide an alternate means of thermal protection on every motor. The drive controller cannot provide adequate motor thermal protection for each motor.

### Operation on an Impedance Grounded System

When using the drive controller on a system with an isolated or impedance grounded neutral, use a permanent insulation monitor compatible with non-linear loads.

ATV31••••••M2[1] and N4 drive controllers feature built-in radio frequency interference (RFI) filters which have capacitors to ground. These filters can be disconnected from ground when using the drive controller on an impedance grounded system to increase the operating life of their capacitors. Refer to the *ATV31 Installation Manual* for more information.

### Programming Recommendations

Use the configuration settings tables beginning on page 89 to prepare and record the configuration before programming the drive controller. It is always possible to **return to the factory settings** by setting the FCS parameter to InI in the drC-, I-O-, CtL-, or FUn- menus. See pages 30, 33, 47, and 75.

When first commissioning an ATV31 drive controller for a 60 Hz system, perform a factory parameter reset. Be sure to set bFr to 60 Hz.

We recommend using the auto-tuning function to optimize the drive controller's accuracy and response time. Auto-tuning measures the stator resistance of the motor to optimize the control algorithms. See page 29.

[1] Throughout this manual, the symbol "•" in a catalog number denotes the portion of the number that varies with the drive controller rating.

© 2004 Schneider Electric All Rights Reserved

ENGLISH

## FACTORY SETTINGS

The ATV31 drive controller is supplied ready for use in most applications, with the factory settings shown in Table 1.

**Table 1: Factory Settings**

| Function | Code | Factory Setting |
|---|---|---|
| Display | — | rdY with motor stopped,<br>motor frequency (for example, 50 Hz) with motor running |
| Motor frequency | bFr | 50 Hz |
| Type of voltage/frequency ratio | UFt | n: sensorless flux vector control for constant torque applications |
| Normal stop mode | Stt | StN: normal stop on deceleration ramp |
| Stop mode in the event of a fault | EPL | YES: freewheel stop |
| Linear ramps | ACC, dEC | 3 seconds |
| Low speed | LSP | 0 Hz |
| High speed | HSP | 50 Hz |
| Frequency loop gain | FLG, StA | Standard |
| Motor thermal current | ItH | Nominal motor current (value depends on the drive controller rating) |
| DC injection braking | SdC | 0.7 x nominal drive controller current for 0.5 seconds |
| Deceleration ramp adaptation | brA | YES: automatic adaptation of the deceleration ramp in the event of overvoltage on braking |
| Automatic restart | Atr | nO: no automatic restart after a fault |
| Switching frequency | SFr | 4 kHz |
| Logic inputs | LI1, LI2 | 2-wire transition detection control:<br>LI1 = forward, LI2 = reverse.<br>Not assigned on ATV31••••••A[1] drive controllers |
| | LI3, LI4 | 4 preset speeds:<br>speed 1 = speed reference or LSP (see page 24)<br>speed 2 = 10 Hz<br>speed 3 = 15 Hz<br>speed 4 = 20 Hz |
| | LI5, LI6 | Not assigned |
| Analog inputs | AI1 | Speed reference 0–10 V.<br>Not assigned on ATV31••••••A[1] drive controllers. |
| | AI2 | Summed speed reference input 0 ±10 V |
| | AI3 | 4–20 mA, not assigned |
| Relays | R1 | The contact opens in the event of a fault or if power is removed from the drive controller. |
| | R2 | Not assigned |
| Analog output | AOC | 0–20 mA, not assigned |

[1] ATV31••••••A range drive controllers have a reference potentiometer, a run button, and a stop/reset button. They are factory set for local control with the run button, the stop/reset button, and the reference potentiometer active. Logic inputs LI1 and LI2 and analog input AI1 are inactive (not assigned).


© 2004 Schneider Electric All Rights Reserved

ENGLISH

## DRIVE THERMAL PROTECTION

Thermal protection of the drive controller is achieved with a positive temperature coefficient (PTC) resistor on the heatsink or power module. In the event of an overcurrent, the drive controller trips to protect itself against overloads. Typical tripping points are:

- Motor current is 185% of nominal drive controller current for 2 seconds
- Motor current is 150% of nominal drive controller current for 60 seconds

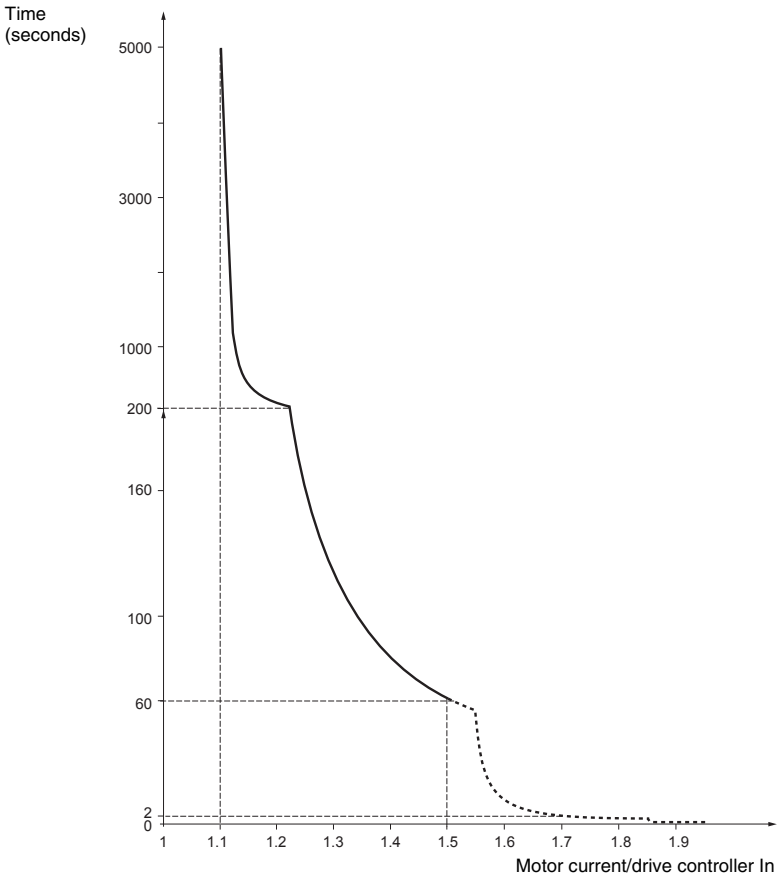


### Ventilation

The fan starts when the drive controller is powered up, but stops after 10 seconds if a run command is not received. The fan starts automatically when the drive controller receives an operating direction and reference. It stops a few seconds after motor speed is less than 0.2 Hz and injection braking is completed.

© 2004 Schneider Electric All Rights Reserved

ENGLISH

## MOTOR THERMAL PROTECTION

Motor thermal protection is achieved by continuous calculation of $I^2t$. The protection is available for self-cooled motors.

*NOTE: The motor thermal state memory returns to zero when line power is removed from the drive controller.*

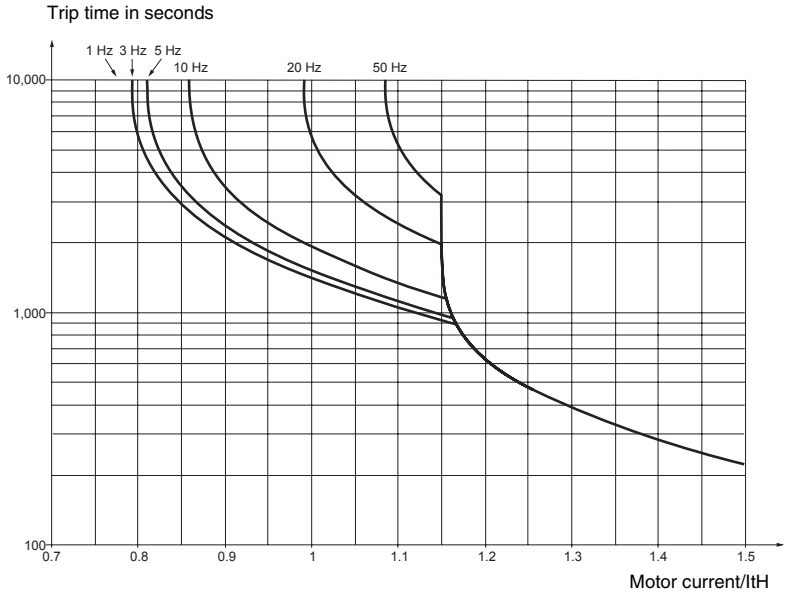


# CAUTION

**INADEQUATE MOTOR THERMAL PROTECTION**

The use of external overload protection is required under the following conditions:

- Starting from line power
- Running multiple motors
- Running motors rated at less than 0.2 times the nominal drive current
- Using motor switching

**Failure to follow this instruction can result in equipment damage.**

Refer to “Preliminary Recommendations” on pages 10–11 for more information about external overload protection.


© 2004 Schneider Electric All Rights Reserved

ENGLISH

# SECTION 2: PROGRAMMING

## DRIVE KEYPAD DISPLAY

**⚠ DANGER**

**UNQUALIFIED USER**

- This equipment must be installed and serviced only by qualified personnel.
- Qualified personnel performing diagnostics or troubleshooting that requires electrical conductors to be energized must comply with NFPA 70 E - Standard for Electrical Safety Requirements for Employee Workplaces and OSHA Standards - 29 CFR Part 1910 Subpart S Electrical.

**Failure to follow these instructions will result in death or serious injury.**

### ATV31•••••• Controllers

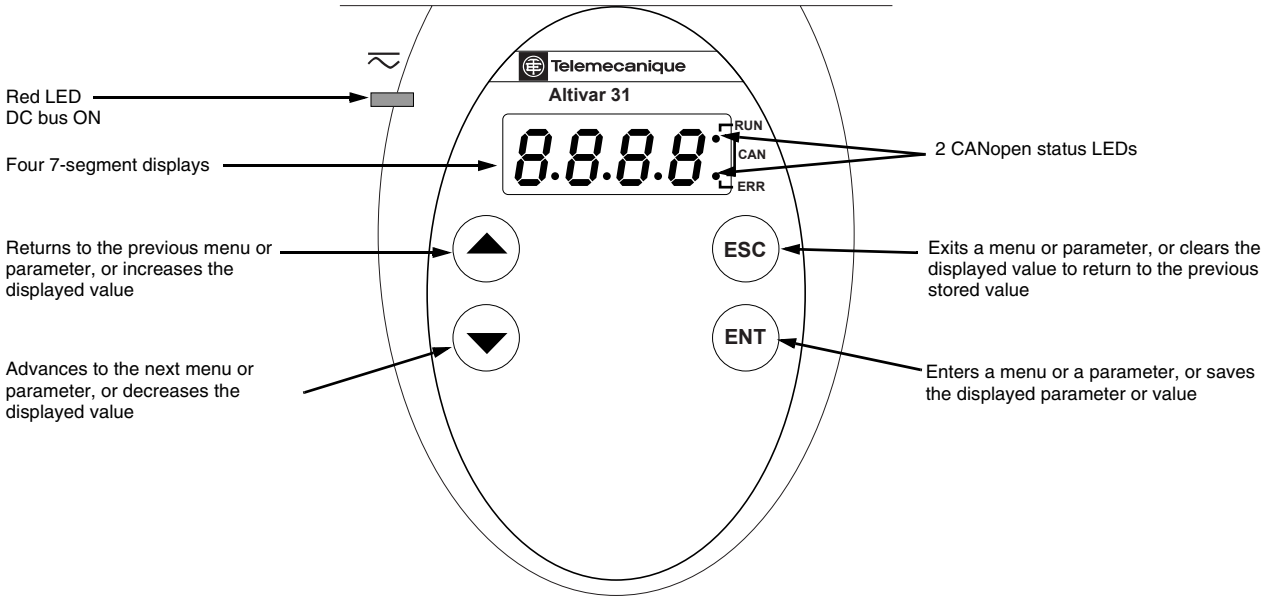


- Press and hold down (longer than 2 seconds) the ▲ or ▼ keys to scroll through the data quickly.
- Pressing ▲ or ▼ does not store the selection.
- To store the selection, press the ENT key.The display flashes when a value is stored.

A normal display with no fault present and no run command shows:

- The value of one of the display parameters (see page 82). The default display is motor frequency, for example 43.0. In current limiting mode, the display flashes.
- InI: Initialization sequence

© 2004 Schneider Electric All Rights Reserved

ENGLISH

- rdY: Drive ready
- dcb: DC injection braking in progress
- nSt: Freewheel stop
- FSt: Fast stop
- tUn: Auto-tuning in progress

If a fault is present, the display flashes.

## ATV31••••••A Controllers

ATV31••••••A controllers have a reference potentiometer, a run button, and a stop/reset button.

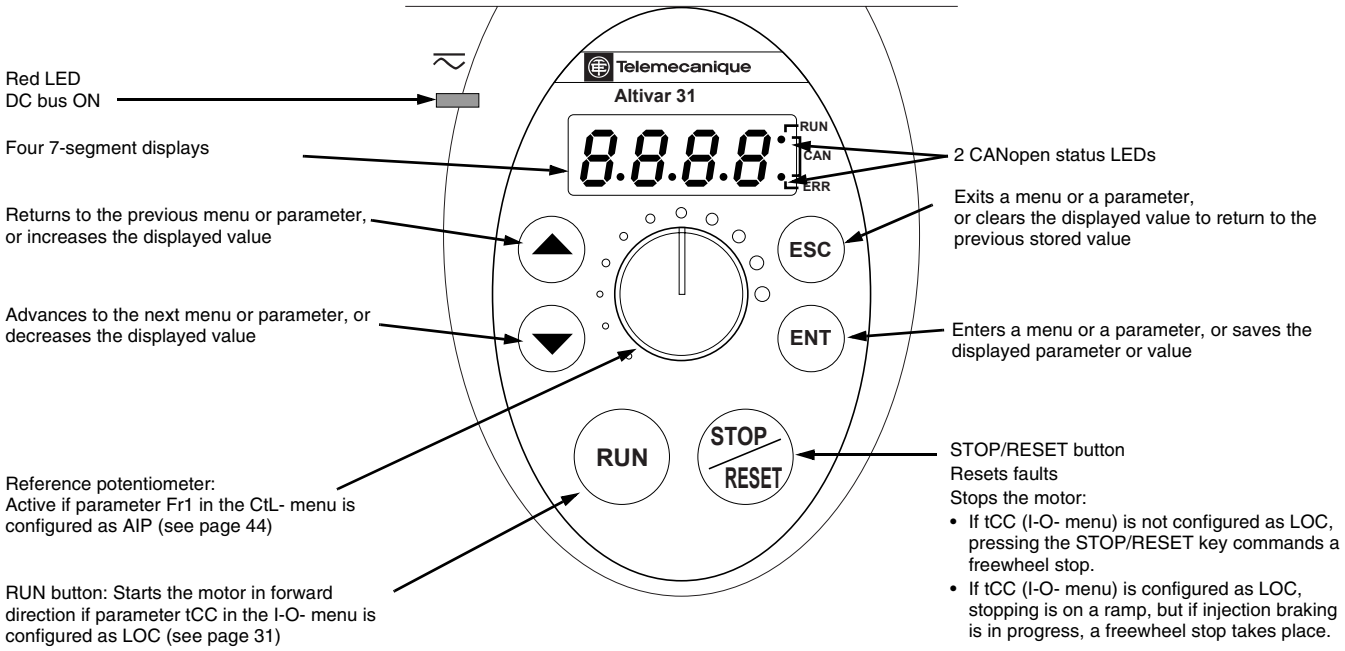


- Press and hold down (longer than 2 seconds) the ▲ or ▼ keys to scroll through the data quickly.
- Pressing ▲ or ▼ does not store the selection.
- To store the selection, press the ENT key.The display flashes when a value is stored.

A normal display with no fault present and no run command shows:

- The value of one of the display parameters (see page 82). The default display is motor frequency, for example 43.0. In current limiting mode, the display flashes.
- InI: Initialization sequence
- rdY: Drive ready
- dcb: DC injection braking in progress
- nSt: Freewheel stop
- FSt: Fast stop
- tUn: Auto-tuning in progress

If a fault is present, the display flashes.


© 2004 Schneider Electric All Rights Reserved

ENGLISH

## REMOTE KEYPAD DISPLAY

The optional remote keypad display is a local control unit that can be wall-mounted on the door of an enclosure. It has a cable with connectors for connection to the drive serial link (refer to the manual supplied with the display). The remote keypad display has the same display and programming buttons as the drive controller, with the addition of a switch to lock access to the menu and three buttons for commanding the drive controller:

- FWD/REV commands the direction of rotation.
- RUN commands the motor to run.
- STOP/RESET commands the motor to stop or resets a fault. Pressing the STOP/RESET button once stops the motor; pressing it a second time stops DC injection braking if it is configured.

In order for the remote keypad display to be active, the tbr parameter in the COM- menu must remain at the factory setting, 19.2 (19,200 bps, see page 80).

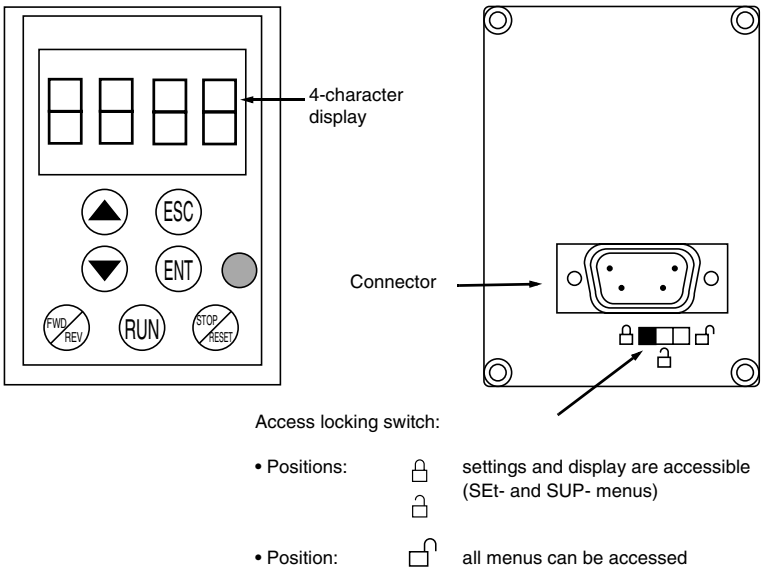


*NOTE: Password protection has priority over the access locking switch. See page 84.*

Placing the access locking switch in the locked position also prevents the drive settings from being accessed via the drive controller keypad. When the remote keypad display is disconnected, if the access locking switch is in the locked position, *the drive controller keypad also remains locked*.

### Saving and Loading Configurations

Up to four complete configurations can be stored in the remote keypad display and transferred to other drive controllers of the same rating. Four different operations for the same device can also be stored on the terminal. See the SCS and FCS parameters in the drC-, I-O-, CtL-, or FUn- menus. See pages 30, 33, 47, and 75.

© 2004 Schneider Electric All Rights Reserved

ENGLISH

## ACCESSING THE MENUS

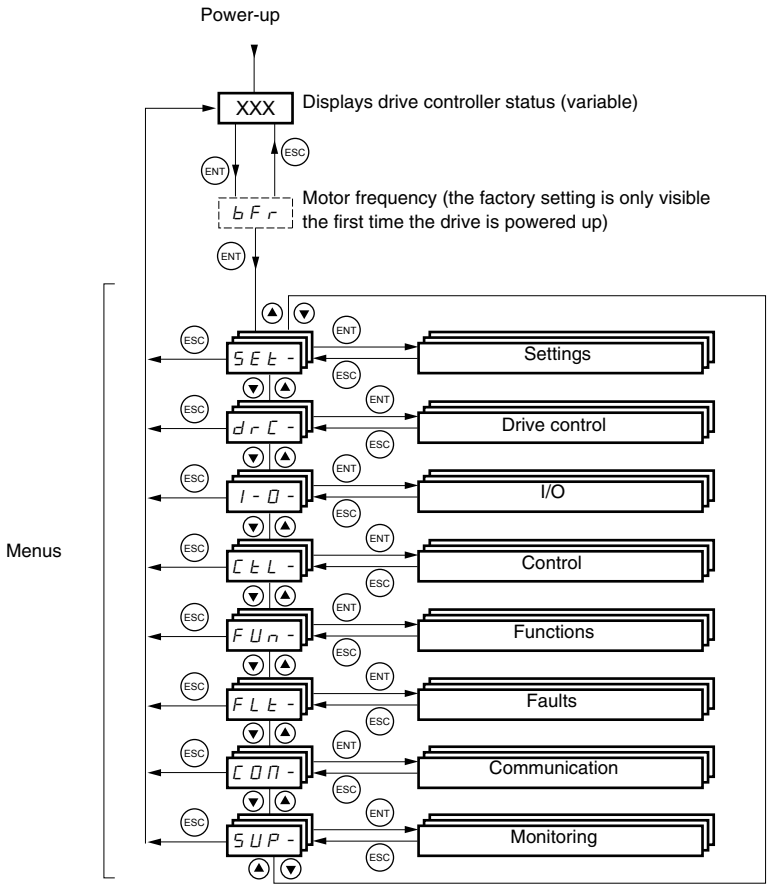


For added convenience, some parameters can be accessed in more than one menu. For example, return to factory settings (FCS) and saving the configuration (SCS) are available in multiple menus.

*NOTE: Throughout this guide, a dash appears after menu codes to differentiate them from parameter codes. For example, SEt- is a menu, but ACC is a parameter.*


© 2004 Schneider Electric All Rights Reserved

ENGLISH

## ACCESSING THE PARAMETERS

The following figure illustrates how to access parameters and assign their values. To store the parameter value, press the ENT key. The display flashes when a value is stored.

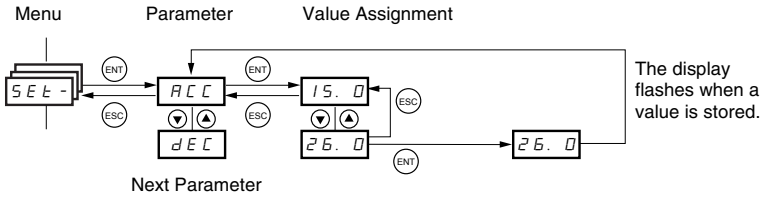


All of the menus are drop-down type menus. Once you have reached the last parameter in a list, press the ▼ key to return to the first parameter. From the first parameter in the list, press the ▲ key to jump to the last parameter.

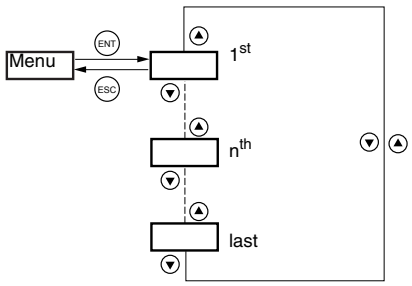


If you have modified a parameter in a menu and you return to that menu without accessing another menu in the meantime, you will be taken directly to the parameter you last modified. See the illustration below. If you have accessed another menu or have restarted the drive controller since the modification, you will be taken to the first parameter in the menu. See the illustration above.

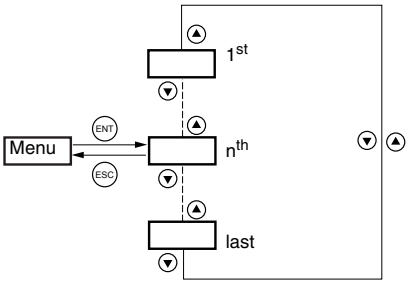


## bFr Parameter

Motor frequency, bFr, can only be modified when the drive controller is stopped and not receiving a run command.

| Code | Description | Adjustment range | Factory setting |
|---|---|---|---|
| bFr | Motor frequency | 50 or 60 Hz | 50 Hz |
| | This is the first parameter displayed when the drive controller is first powered up. bFr can be modified at any time in the drC- menu. Modifying this parameter also modifies the values of the following parameters: HSP (page 24), Ftd (page 27), FrS (page 28), and tFr (page 30). | | |

© 2004 Schneider Electric All Rights Reserved

ENGLISH

## FUNCTION COMPATIBILITY

Automatic restart, catch on the fly, and reverse direction are only available as described below:

- Automatic restart is only available in 2-wire control (tCC = 2C and tCt = LEL or PFO, see page 31).
- Catch on the fly is only available in 2-wire control (tCC = 2C and tCt = LEL or PFO, see page 31). It is deactivated if automatic DC injection braking is configured as DC (AdC = Ct, see page 53).
- Reverse direction is only available on ATV31••••••A controllers if local control is active (tCC = LOC, see page 31).

The choice of application functions is limited by the number of I/O available and by the fact that some functions are incompatible with one another as illustrated in the figure below. Functions which are not listed in the figure are fully compatible. If there is an incompatibility between functions, the first function configured will prevent the others from being configured.

| | Summing inputs | +/- Speed [1] | Management of limit switches | Preset speeds | PI regulator | Jog operation | Brake sequence | DC injection stop | Fast stop | Freewheel stop |
|---|---|---|---|---|---|---|---|---|---|---|
| Summing inputs | | ● | | ↑ | ● | ↑ | | | | |
| +/- Speed [1] | ● | | | ● | ● | ● | | | | |
| Management of limit switches | | | | | ● | | | | | |
| Preset speeds | ← | ● | | | ● | ↑ | | | | |
| PI regulator | ● | ● | ● | ● | | ● | ● | | | |
| Jog operation | ← | ● | | ← | ● | | ● | | | |
| Brake sequence | | | | | ● | ● | | ● | | |
| DC injection stop | | | | | | | ● | | | ↑ |
| Fast stop | | | | | | | | | | ↑ |
| Freewheel stop | | | | | | | | ← | ← | |

[1] Excluding a special application with reference channel Fr2 (see pages 39 and 41).

● Incompatible functions  Compatible functions  Not applicable

← ↑ Functions which cannot be active at the same time. The arrow points to the function that has priority.

Stop functions have priority over run commands. Speed references via logic command have priority over analog references.


© 2004 Schneider Electric All Rights Reserved

ENGLISH

## LOGIC AND ANALOG INPUT APPLICATION FUNCTIONS

Tables 2–5 list the functions that can be assigned to the logic and analog inputs and their factory assignments. A single input can activate several functions at the same time. For example, reverse and second ramp can be assigned to one input. When more than one function is assigned to an input, ensure that the functions are compatible. Use the LIA- and AIA- sub-menus of the SUP- menu (see page 84) to display the functions assigned to the inputs and to check their compatibility.

### Table 2: Logic Inputs

| Function | Code | See Page: | Factory Setting | |
|---|---|---|---|---|
| | | | ATV31•••••• | ATV31••••••A |
| Not assigned | — | — | LI5–LI6 | LI1–LI2<br>LI5–LI6 |
| Forward | — | — | LI1 | |
| 2 preset speeds | PS2 | 56 | LI3 | LI3 |
| 4 preset speeds | PS4 | 56 | LI4 | LI4 |
| 8 preset speeds | PS8 | 56 | — | — |
| 16 preset speeds | PS16 | 57 | — | — |
| 2 preset PI references | Pr2 | 66 | — | — |
| 4 preset PI references | Pr4 | 66 | — | — |
| + speed | USP | 61 | — | — |
| - speed | dSP | 61 | — | — |
| Jog operation | JOG | 58 | — | — |
| Ramp switching | rPS | 50 | — | — |
| Switching for 2nd current limit | LC2 | 71 | — | — |
| Fast stop via logic input | FSt | 51 | — | — |
| DC injection via logic input | dC1 | 51 | — | — |
| Freewheel stop via logic input | nSt | 52 | — | — |
| Reverse | rrS | 31 | LI2 | — |
| External fault | EtF | 78 | — | — |
| RESET (fault reset) | rSF | 77 | — | — |
| Forced local mode | FLO | 80 | — | — |
| Reference switching | rFC | 45 | — | — |
| Control channel switching | CCS | 46 | — | — |
| Motor switching | CHP | 72 | — | — |
| Limiting of forward motion (limit switch) | LAF | 74 | — | — |
| Limiting of reverse motion (limit switch) | LAr | 74 | — | — |
| Fault inhibit | InH | 79 | — | — |

### Table 3: Analog Inputs

| Function | Code | See Page: | Factory Setting | |
|---|---|---|---|---|
| | | | ATV31•••••• | ATV31••••••A |
| Not assigned | — | — | AI3 | AI1 - AI3 |
| Reference 1 | Fr1 | 44 | AI1 | AIP<br>(potentiometer) |
| Reference 2 | Fr2 | 44 | | — |
| Summing input 2 | SA2 | 54 | AI2 | AI2 |
| Summing input 3 | SA3 | 54 | — | — |
| PI regulator feedback | PIF | 66 | — | — |

© 2004 Schneider Electric All Rights Reserved

ENGLISH

## Table 4: Analog and Logic Outputs

| Function | Code | See Page: | Factory Setting |
|---|---|---|---|
| Not assigned | — | — | AOC/AOV |
| Motor current | OCr | 32 | — |
| Motor frequency | rFr | 32 | — |
| Motor torque | OLO | 32 | — |
| Power supplied by the drive controller | OPr | 32 | — |
| Drive fault (logic data) | FLt | 32 | — |
| Drive running (logic data) | rUn | 32 | — |
| Frequency threshold reached (logic data) | FtA | 32 | — |
| High speed (HSP) reached (logic data) | FLA | 32 | — |
| Current threshold reached (logic data) | CtA | 32 | — |
| Frequency reference reached (logic data) | SrA | 32 | — |
| Motor thermal threshold reached (logic data) | tSA | 32 | — |
| Brake sequence (logic data) | bLC | 32 | — |

## Table 5: Relays

| Function | Code | See Page: | Factory Setting |
|---|---|---|---|
| Not assigned | — | — | R2 |
| Drive fault | FLt | 32 | R1 |
| Drive running | rUn | 32 | — |
| Frequency threshold reached | FtA | 32 | — |
| High speed (HSP) reached | FLA | 32 | — |
| Current threshold reached | CtA | 32 | — |
| Frequency reference reached | SrA | 32 | — |
| Motor thermal threshold reached | tSA | 32 | — |
| Brake sequence | bLC | 32 | — |


© 2004 Schneider Electric All Rights Reserved

ENGLISH

# SECTION 3: MENUS

**⚠ DANGER**

**UNINTENDED EQUIPMENT OPERATION**

Ensure that changes to the operating settings do not present any danger, especially when making adjustments while the drive controller is running the motor.

**Failure to follow these instructions will result in death or serious injury.**

**CAUTION**

**MOTOR OVERHEATING**

- This drive controller does not provide direct thermal protection for the motor.
- Use of a thermal sensor in the motor may be required for protection at all speeds or loading conditions.
- Consult the motor manufacturer for the thermal capability of the motor when operated over the desired speed range.

**Failure to follow these instructions can result in equipment damage.**

## SETTINGS MENU SEt-

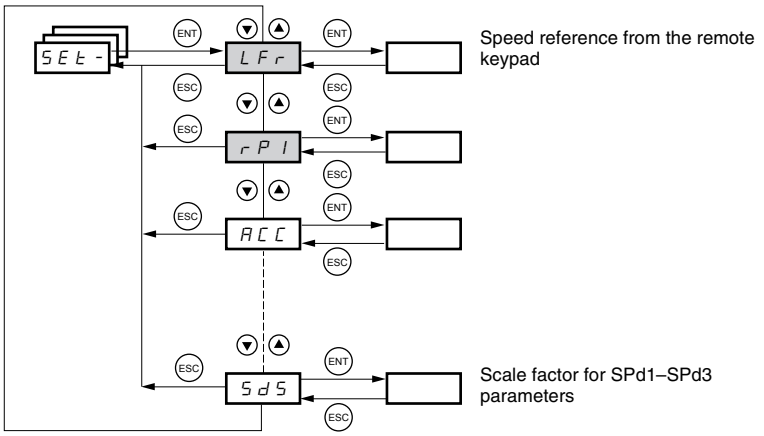


The parameters in the SEt- menu can be modified with the drive controller running or stopped. However, we recommend making modifications to the settings with the drive controller stopped.

© 2004 Schneider Electric All Rights Reserved

ENGLISH

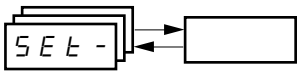


| Code | Description | | Adjustment Range | Factory Setting |
|---|---|---|---|---|
| LFr | Speed reference from the remote keypad. | | 0 to HSP | |
| | This parameter appears if LCC = YES (page 46) or if Fr1/Fr2 = LCC (page 44), and if the remote keypad is online. In this case, LFr can also be accessed via the drive controller keypad.<br>LFr is reset to 0 when the drive controller is powered down. | | | |
| rPI | Internal PI regulator reference | See page 62. | 0.0 to 100% | 0 |
| ACC | Acceleration ramp time | | 0.1 to 999.9 s | 3 s |
| | Defined as the time it takes for the motor to go from 0 Hz to FrS (nominal frequency, see page 28). | | | |
| AC2 | 2nd acceleration ramp time | See page 50. | 0.1 to 999.9 s | 5 s |
| dE2 | 2nd deceleration ramp time | See page 50. | 0.1 to 999.9 s | 5 s |
| dEC | Deceleration ramp time | | 0.1 to 999.9 s | 3 s |
| | Defined as the time it takes for the motor to go from FrS (nominal frequency, see page 28) to 0 Hz.<br>Ensure that dEC is not set too low for the load. | | | |
| tA1 | Start of custom acceleration ramp, rounded as a percentage of total ramp time (ACC or AC2) | See page 49. | 0 to 100 | 10% |
| tA2 | End of custom acceleration ramp, rounded as a percentage of total ramp time (ACC or AC2) | See page 49. | 0 to (100-tA1) | 10% |
| tA3 | Start of custom deceleration ramp, rounded as a percentage of total ramp time (dEC or dE2) | See page 49. | 0 to 100 | 10% |
| tA4 | End of custom deceleration ramp, rounded as a percentage of total ramp time (dEC or dE2) | See page 49. | 0 to (100-tA3) | 10% |
| LSP | Low speed | | 0 to HSP | 0 Hz |
| | Minimum reference | | | |
| HSP | High speed | | LSP to tFr | bFr |
| | Maximum reference. Ensure that this setting is suitable for the motor and the application. | | | |
| ItH | Current used for motor thermal protection. | | 0.2 to 1.5 In[1] | Varies with drive controller rating |
| | Set ItH to the nominal current indicated on the motor nameplate.<br>Refer to OLL on page 78 if you wish to suppress motor thermal protection. | | | |

[1] In is the nominal drive controller current indicated on the drive controller nameplate.

These parameters appear regardless of how the other menus have been configured.
They only appear in the Settings menu.

These parameters only appear if the corresponding function has been selected in another menu. To facilitate programming, they can also be accessed and adjusted from the menu where the corresponding function is found. A detailed description of these functions can be found on the indicated pages.


© 2004 Schneider Electric All Rights Reserved

ENGLISH

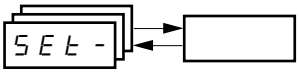


| Code | Description | | Adjustment Range | Factory Setting |
|---|---|---|---|---|
| UFr | IR compensation or voltage boost | | 0 to 100% | 20 |
| | If UFt (page 29) = n or nLd, UFr is IR compensation.<br>If UFt = L or P, UFr is voltage boost.<br>Used to optimize torque at very low speed. Increase UFr if the torque is insufficient.<br>To avoid operating instability, ensure that the value of UFr is not too high for a warm motor.<br>*NOTE: Modifying UFt (page 29) will cause UFr to return to the factory setting (20%).* | | | |
| FLG | Frequency loop gain | | 1 to 100% | 20 |
| | This parameter can only be accessed if UFt (page 29) = n or nLd.<br>FLG adjusts the speed ramp based on the inertia of the driven load.<br>If the value is too low, the response time is longer. If the value is too high, operating instability can result.<br> 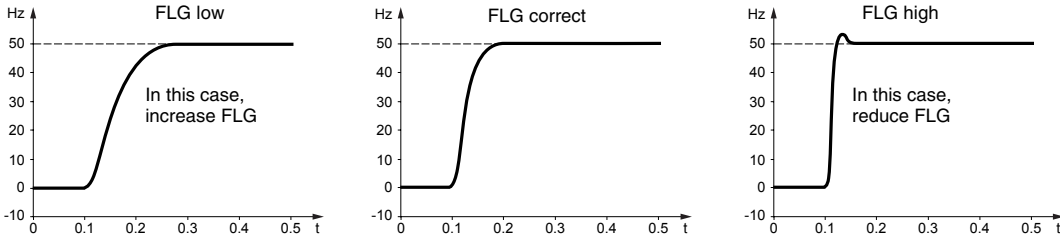 <br> | | | |
| StA | Frequency loop stability | | 1 to 100% | 20 |
| | This parameter can only be accessed if UFt (page 29) = n or nLd.<br>After a period of acceleration or deceleration, StA adapts the return to a steady state to the dynamics of the machine.<br>If the value is too low, overspeed or operating instability can result. If the value is too high, the response time is longer.<br> 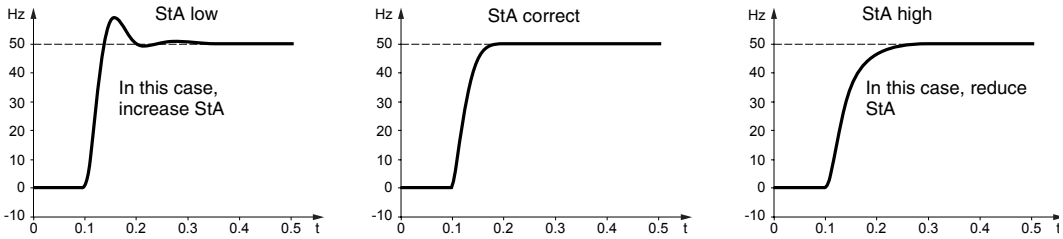 <br> | | | |
| SLP | Slip compensation | | 0 to 150% | 100 |
| | This parameter can only be accessed if UFt (page 29) = n or nLd.<br>SLP adjusts slip compensation for fine tuning of speed regulation.<br>If the slip setting < actual slip, the motor is not rotating at the correct speed in steady state.<br>If the slip setting > actual slip, the motor is overcompensated and the speed is unstable. | | | |
| IdC | Level of DC injection braking current activated via a logic input or selected as a stop mode.[1] | See page 51. | 0 to In (In is the nominal drive controller current indicated on the nameplate). | 0.7 In |
| tdC | Total DC injection braking time selected as a stop mode.[1] | See page 51. | 0.1 to 30 s | 0.5 s |
| tdC1 | Automatic DC injection time | See page 53. | 0.1 to 30 s | 0.5 s |
| SdC1 | Level of automatic DC injection current | See page 53. | 0 to 1.2 In | 0.7 In |
| tdC2 | 2nd automatic DC injection time | See page 53. | 0 to 30 s | 0 s |
| SdC2 | 2nd level of DC injection current | See page 53. | 0 to 1.2 In | 0.5 In |

[1] These settings are not related to the Automatic DC Injection function.

These parameters only appear if the corresponding function has been selected in another menu. To facilitate programming, they can also be accessed and adjusted from the menu where the corresponding function is found. A detailed description of these functions can be found on the indicated pages.

© 2004 Schneider Electric All Rights Reserved

ENGLISH

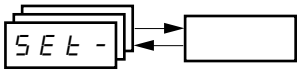


| Code | Description | | Adjustment Range | Factory Setting |
|---|---|---|---|---|
| JPF | Skip frequency | | 0 to 500 | 0 Hz |
| | JPF prevents prolonged operation at a frequency range of ± 1 Hz around JPF. This function avoids a critical speed which leads to resonance. Setting the function to 0 renders it inactive. | | | |
| JF2 | 2nd skip frequency | | 0 to 500 | 0 Hz |
| | JF2 prevents prolonged operation at a frequency range of ± 1 Hz around JF2. This function avoids a critical speed which leads to resonance. Setting the function to 0 renders it inactive. | | | |
| JGF | Jog operating frequency | See page 58. | 0 to 10 Hz | 10 Hz |
| rPG | PI regulator proportional gain | See page 66. | 0.01 to 100 | 1 |
| rIG | PI regulator integral gain | See page 66. | 0.01 to 100/s | 1/s |
| FbS | PI feedback multiplication coefficient | See page 66. | 0.1 to 100 | 1 |
| PIC | Reversal of the direction of correction of the PI regulator | See page 66. | nO - YES | nO |
| rP2 | 2nd preset PI reference | See page 66. | 0 to 100% | 30% |
| rP3 | 3rd preset PI reference | See page 66. | 0 to 100% | 60% |
| rP4 | 4th preset PI reference | See page 66. | 0 to 100% | 90% |
| SP2 | 2nd preset speed | See page 57. | 0 to 500 Hz | 10 Hz |
| SP3 | 3rd preset speed | See page 57. | 0 to 500 Hz | 15 Hz |
| SP4 | 4th preset speed | See page 57. | 0 to 500 Hz | 20 Hz |
| SP5 | 5th preset speed | See page 57. | 0 to 500 Hz | 25 Hz |
| SP6 | 6th preset speed | See page 57. | 0 to 500 Hz | 30 Hz |
| SP7 | 7th preset speed | See page 57. | 0 to 500 Hz | 35 Hz |
| SP8 | 8th preset speed | See page 57. | 0 to 500 Hz | 40 Hz |
| SP9 | 9th preset speed | See page 57. | 0 to 500 Hz | 45 Hz |
| SP10 | 10th preset speed | See page 57. | 0 to 500 Hz | 50 Hz |
| SP11 | 11th preset speed | See page 57. | 0 to 500 Hz | 55 HZ |
| SP12 | 12th preset speed | See page 57. | 0 to 500 Hz | 60 Hz |
| SP13 | 13th preset speed | See page 57. | 0 to 500 Hz | 70 Hz |
| SP14 | 14th preset speed | See page 57. | 0 to 500 Hz | 80 Hz |
| SP15 | 15th preset speed | See page 57. | 0 to 500 Hz | 90 Hz |
| SP16 | 16th preset speed | See page 57. | 0 to 500 Hz | 100 Hz |
| CL1 | Current limit | | 0.25 to 1.5 In[1] | 1.5 In |
| | Used to limit the torque and the temperature rise of the motor. | | | |
| CL2 | 2nd current limit | See page 71. | 0.25 to 1.5 In | 1.5 In |
| tLS | Low speed operating time | | 0 to 999.9 s | 0 (no time limit) |
| | After operation at LSP for a defined period, a motor stop is requested automatically. The motor restarts if the frequency reference is greater than LSP and if a run command is still present. | | | |
| rSL | Restart error threshold (wake-up threshold) | See page 67. | 0 to 100% | 0 |
| UFr2 | IR compensation, motor 2 | See page 73. | 0 to 100% | 20 |
| FLG2 | Frequency loop gain, motor 2 | See page 73. | 1 to 100% | 20 |
| StA2 | Stability, motor 2 | See page 73. | 1 to 100% | 20 |
| SLP2 | Slip compensation, motor 2 | See page 73. | 0 to 150% | 100% |

[1] In is the nominal drive controller current indicated on the drive controller nameplate.

These parameters only appear if the corresponding function has been selected in another menu. To facilitate programming, they can also be accessed and adjusted from the menu where the corresponding function is found. A detailed description of these functions can be found on the indicated pages.


© 2004 Schneider Electric All Rights Reserved

ENGLISH

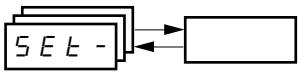


| Code | Description | Adjustment Range | Factory Setting |
|---|---|---|---|
| Ftd | Motor frequency threshold above which the relay contact (R1 or R2) closes, or output AOV = 10 V. R1, R2, or dO must be assigned to FtA. | 0 to 500 Hz | bFr |
| ttd | Motor thermal state threshold above which the relay contact (R1 or R2) closes, or output AOV = 10 V. R1, R2, or dO must be assigned to tSA. | 0 to 118% | 100% |
| Ctd | Motor current threshold beyond which the relay contact (R1 or R2) closes, or output AOV = 10 V. R1, R2, or dO must be assigned to CtA. | 0 to 1.5 In[1] | In[1] |
| SdS | Scale factor for display parameter SPd1/SPd2/SPd3 (see SUP- menu on page 83) | 0.1 to 200 | 30 |
| | Used to scale a value (such as motor speed) in proportion to the output frequency rFr.<br>If SdS ≤ 1, SPd1 is displayed (possible definition = 0.01).<br>If 1 < SdS ≤ 10, SPd2 is displayed (possible definition = 0.1).<br>If SdS > 10, SPd3 is displayed (possible definition = 1).<br>If SdS > 10 and SdS x rFr > 9999:<br>Display of Spd3 = $\frac{SdS \times rFr}{1000}$ (to 2 decimal places).<br>For example, if SdS x rFr equals 24,223, the display shows 24.22.<br>If SdS > 10 and SdS x rFr > 65535, the display shows 65.54.<br><br>Example: Display motor speed for a 4-pole motor,<br>1500 rpm at 50 Hz (synchronous speed):<br>SdS = 30<br>SPd3 = 1500 at rFr = 50 Hz | | |
| SFr | Switching frequency See page 30. | 2.0 to 16 kHz | 4 kHz |
| | This parameter can also be accessed in the drC- menu. | | |

[1] In is the nominal drive controller current indicated on the drive controller nameplate.

## DRIVE CONTROL MENU drC-

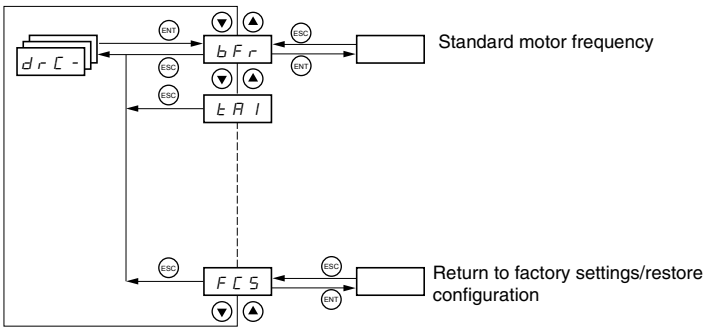


With the exception of tUn, drive control parameters can only be modified when the drive controller is stopped and no run command is present. This menu can be accessed with the access locking switch on the remote keypad display in the 🔓 position. Drive controller performance can be optimized by:

- Setting the drive control parameters to the values on the motor nameplate
- Performing an auto-tune operation (on a standard asynchronous motor)

© 2004 Schneider Electric All Rights Reserved

ENGLISH

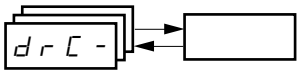


| Code | Description | Adjustment Range | Factory Setting |
|---|---|---|---|
| bFr | Motor frequency | 50 or 60 Hz | 50 |
| | This parameter modifies the presets of the following parameters: HSP (page 24), Ftd (page 27), FrS (page 28), and tFr (page 30). | | |
| UnS | Nominal motor voltage indicated on the nameplate | Varies with drive controller rating | Varies with drive controller rating |
| | ATV31•••M2: 100 to 240 V<br>ATV31•••M3X: 100 to 240 V<br>ATV31•••N4: 100 to 500 V<br>ATV31•••S6X: 100 to 600 V | | |
| FrS | Nominal motor frequency indicated on the nameplate | 10 to 500 Hz | 50 Hz |
| | The ratio $\frac{\text{UnS (in volts)}}{\text{FrS (in Hz)}}$ must not exceed the following values:<br><br>ATV31•••M2: 7<br>ATV31•••M3X: 7<br>ATV31•••N4: 14<br>ATV31•••S6X: 17<br>*NOTE: Changing the setting of bFr to 60 Hz also changes the setting of FrS to 60 Hz.* | | |
| nCr | Nominal motor current indicated on the nameplate | 0.25 to 1.5 In[1] | Varies with drive controller rating |
| nSP | Nominal motor speed indicated on the nameplate | 0 to 32760 rpm | Varies with drive controller rating |
| | 0 to 9999 rpm, then 10.00 to 32.76 krpm<br>If the nameplate indicates synchronous speed and slip (in Hz or as a percentage) instead of nominal speed, calculate nominal speed as follows:<br><br>Nominal speed = Synchronous speed x $\frac{\text{100 - slip as a\%}}{100}$<br>or<br><br>Nominal speed = Synchronous speed x $\frac{\text{50 - slip in Hz}}{50}$ (50 Hz motors)<br>or<br><br>Nominal speed = Synchronous speed x $\frac{\text{60 - slip in Hz}}{60}$ (60 Hz motors) | | |
| COS | Motor power factor indicated on the nameplate | 0.5 to 1 | Varies with drive controller rating |

[1] In is the nominal drive controller current indicated on the drive controller nameplate.


© 2004 Schneider Electric All Rights Reserved

ENGLISH

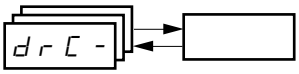


| Code | Description | Adjustment Range | Factory Setting |
|---|---|---|---|
| rSC | Cold state stator resistance | See below. | nO |
| | nO: Function inactive. For applications that do not require high performance or do not tolerate automatic auto-tuning (passing a current through the motor) each time the drive is powered up.<br>InIt: Activates the function. Used to improve low-speed performance, whatever the thermal state of the motor.<br>XXXX: Value of cold state stator resistance used, in mΩ<br>***NOTE: We recommended that you activate this function for lifting and handling applications. This function should only be activated when the motor is cold.***<br>When rSC = InIt, parameter tUn is forced to POn. At the next run command, the stator resistance is measured with an auto-tune. The value of parameter rSC then changes to this measured stator resistance value (XXXX) and is maintained at that value; tUn remains forced to POn. Parameter rSC remains at InIt as long as the stator resistance measurement has not been performed.<br>Value XXXX can be forced or modified using the ▲ ▼ keys. | | |
| tUn | Motor control auto-tuning | See below. | nO |
| | Before performing an auto-tune, ensure that all the drive control parameters (UnS, FrS, nCr, nSP, COS) are configured correctly.<br>nO: Auto-tuning is not performed.<br>YES: Auto-tuning is performed as soon as possible, then the parameter automatically switches to dOnE or, in the event of a fault, to nO. The tnF fault is displayed if tnL = YES (see page 79).<br>dOnE: Auto-tuning is completed and the measured stator resistance will be used to control the motor.<br>rUn: Auto-tuning is performed each time a run command is sent.<br>POn: Auto-tuning is performed each time the controller is powered up.<br>LI1 to LI6: Auto-tuning is performed when the logic input assigned to this function transitions from 0 to 1.<br>Note:<br>tUn is forced to POn if rSC is any value other than nO.<br>Auto-tuning will only be performed if no run or braking command is activated. If a freewheel stop or fast stop function is assigned to a logic input, this input must be set to 1 (active at 0). Auto-tuning may last for 1 to 2 seconds. Wait for the display to change to dOnE or nO. Interrupting auto-tuning may result in an auto-tuning fault (see page 86) and cause the motor to be improperly tuned. During auto-tuning, the motor operates at nominal current. | | |
| tUS | Auto-tuning status<br>(status information only, cannot be modified) | See below. | tAb |
| | tAb: The default stator resistance value is used to control the motor.<br>PEnd: Auto-tuning has been requested but not yet performed.<br>PrOG: Auto-tuning is in progress.<br>FAIL: Auto-tuning has failed.<br>dOnE: Auto-tuning is complete. The stator resistance measured by the auto-tuning function is used to control the motor.<br>Strd: Auto-tuning is complete. The cold state stator resistance is used to control the motor (rSC must be other than nO). | | |
| UFt | Selection of the voltage/frequency ratio | See below. | n |
| | L: Constant torque (for motors connected in parallel or special motors)<br>P: Variable torque (pump and fan applications)<br>n: Sensorless flux vector control (for constant torque applications)<br>nLd: Energy savings (for variable torque applications not requiring high dynamics. This behaves in a similar way to the P ratio at no load and the n ratio with load.)<br> 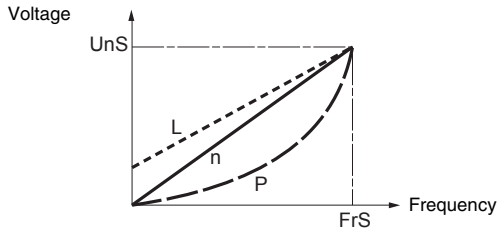 <br> | | |

© 2004 Schneider Electric All Rights Reserved

ENGLISH

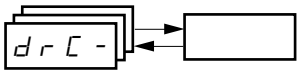


| Code | Description | Adjustment Range | Factory Setting |
|---|---|---|---|
| nrd | Random switching frequency | See below. | YES |
| | This function randomly modulates the switching frequency to reduce motor noise.<br>YES: Frequency with random modulation<br>nO: Fixed frequency | | |
| SFr | Switching frequency[1] | 2.0 to 16 kHz | 4 kHz |
| | Adjust this setting to reduce audible motor noise. If the switching frequency is set to a value higher than 4 kHz, in the event of excessive temperature rise, the drive controller automatically reduces the switching frequency. It increases it again when the temperature returns to normal. Refer to the *ATV31 Installation Manual* for derating curves. | | |
| tFr | Maximum output frequency | 10 to 500 Hz | 60 Hz |
| | The factory setting is 60 Hz, or 72 Hz if bFr is set to 60 Hz. | | |
| SSL | Suppression of the speed loop filter | See below. | nO |
| | nO: The speed loop filter is active (prevents the reference from being exceeded).<br>YES: The speed loop filter is suppressed. In position control applications, this setting reduces the response time, but the reference may be exceeded.<br> 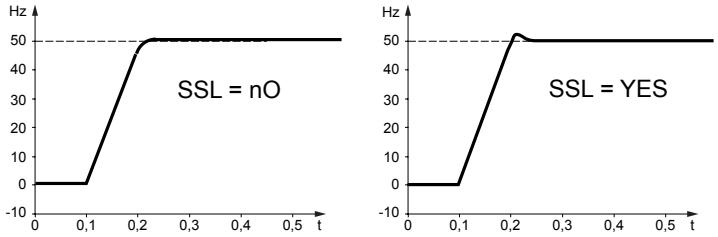 <br> | | |
| SCS | Saving the configuration[2] | See below. | nO |
| | nO: Function inactive<br>Str1: Saves the current configuration (but not the result of auto-tuning) to EEPROM. SCS automatically switches to nO as soon as the save is performed. Use this function to keep another configuration in reserve, in addition to the current configuration.<br>The drive controller is factory set with the current configuration and the backup configuration both initialized to the factory configuration.<br>If the remote keypad display is connected to the drive controller, up to four additional settings are available: FIL1, FIL2, FIL3, and FIL4. Use these selections to save up to four configurations in the remote keypad display's EEPROM memory. SCS automatically switches to nO as soon as the save is performed. | | |
| FCS | Return to factory settings/Restore configuration[2] | See below. | nO |
| | nO: Function inactive<br>rECI: Replaces the current configuration with the backup configuration previously saved by SCS (SCS set to Strl). rECI is visible only if the backup configuration has been saved. FCS automatically changes to nO as soon as this action is performed.<br>In1: Replaces the current configuration with the factory settings. FCS automatically switches to nO as soon as this action is performed.<br>If the remote keypad display is connected to the drive controller, up to four additional selections are available corresponding to backup files loaded in the remote keypad display's EEPROM memory: FIL1, FIL2, FIL3, and FIL4. These selections replace the current configuration with the corresponding backup configuration in the remote keypad display. FCS automatically changes to nO as soon as this action is performed.<br>Note: If nAd briefly appears on the display once the parameter has switched to nO, the configuration transfer is not possible and has not been performed (because the controller ratings are different, for example). If ntr briefly appears on the display once the parameter has switched to nO, a configuration transfer error has occurred and the factory settings must be restored using InI. In both cases, check the configuration to be transferred before trying again.<br>*NOTE: For rECI, InI, and FIL1 to FIL4 to take effect, you must press and hold down the ENT key for 2 s.* | | |

[1] This parameter can also be accessed in the Settings menu, SEt-. See page 23.

[2] SCS and FCS can be accessed in several configuration menus, but their settings affect all menus and parameters as a whole.


© 2004 Schneider Electric All Rights Reserved

ENGLISH

## I/O MENU I-O-

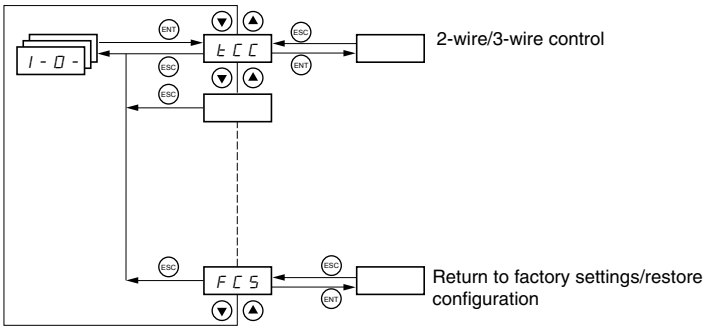


I/O parameters can only be modified when the drive controller is stopped and no run command is present. This menu can be accessed with the access locking switch on the remote keypad display in the 🔓 position.

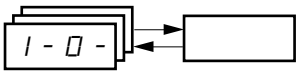


| Code | Description | Factory Setting |
|---|---|---|
| tCC | Type of control: 2-wire, 3-wire, or local | 2C<br>ATV31••••••A: LOC |
| | Control configuration:<br>2C = 2-wire control<br>3C = 3-wire control<br>LOC = Local control, for ATV31••••••A controllers only. This option is not available if parameter LAC = L3 (see page 44).<br><br>2-wire control (maintained contact): The state of the input (open or closed) controls running or stopping.<br><br>Wiring example:<br>LI1: forward<br>LIx: reverse<br> 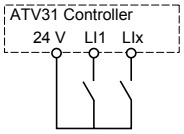 <br><br>3-wire control (pulse control): A forward or reverse pulse is sufficient to control startup. A stop pulse is sufficient to control stopping.<br><br>Wiring example:<br>LI1: stop<br>LI2: forward<br>LIx: reverse<br> 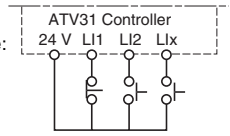 <br><br>*NOTE: To change the assignment of tCC, press the ENT key for 2 s. This causes the following functions to return to their factory setting: rrS, tCt, and all functions affecting logic inputs.* | |
| tCt | Type of 2-wire control (parameter only accessible if tCC = 2C) | trn |
| | LEL: If the forward or reverse input is high when the drive controller is powered up, the drive controller will start the motor. If both inputs are high on power up, the drive controller will run forward.<br>trn: The forward or reverse input must transition from low to high before the drive controller will start the motor. If the forward or reverse input is high when the drive controller is powered up, the input must be cycled before the drive controller will start the motor.<br>PFO: Same as LEL, but the forward input has priority over the reverse input. If forward is activated while the controller is running in reverse, the drive controller will run in the forward direction. | |
| rrS | Reverse operation via logic input | if tCC = 2C: LI2<br>if tCC = 3C: LI3<br>if tCC = LOC: nO |
| | If rrS = nO, reverse operation is not assigned to a logic input. Reverse operation may still be commanded by another means, such as negative voltage on AI2 or a serial link command.<br><br>nO: Not assigned<br>LI2: Logic input LI2, can be accessed if tCC = 2C<br>LI3: Logic input LI3<br>LI4: Logic input LI4<br>LI5: Logic input LI5<br>LI6: Logic input LI6 | |

© 2004 Schneider Electric All Rights Reserved

ENGLISH

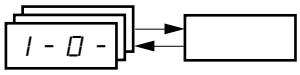


| Code | Description | Factory Setting |
|---|---|---|
| CrL3<br>CrH3 | Value for low speed (LSP) on input AI3, can be set between 0 and 20 mA<br>Value for high speed (HSP) on input AI3, can be set between 4 and 20 mA | 4 mA<br>20 mA |
| | These two parameters are used to configure the input for 0–20 mA, 4–20 mA, 20–4 mA, etc.<br> 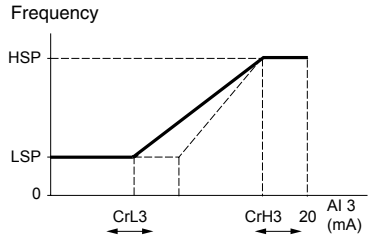 <br><br>Example: 20–4 mA<br> 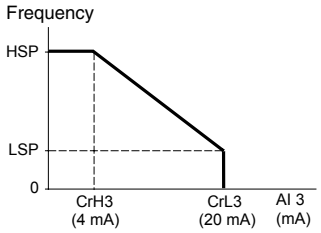 <br> | |
| AOIt | Configuration of the analog output | 0A |
| | 0A: 0–20 mA configuration (use terminal AOC)<br>4A: 4–20 mA configuration (use terminal AOC)<br>10U: 0–10 V configuration (use terminal AOV) | |
| dO | Analog/logic output AOC/AOV | nO |
| | nO: Not assigned<br>OCr: Motor current. 20 mA or 10 V corresponds to twice the nominal drive controller current.<br>rFr: Motor frequency. 20 mA or 10 V corresponds to the maximum frequency tFr (page 30).<br>Otr: Motor torque. 20 mA or 10 V corresponds to twice the nominal motor torque.<br>OPr: Power supplied by the drive. 20 mA or 10 V corresponds to twice the nominal drive controller power.<br>Making the following assignments changes the analog output to a logic output (refer to the *ATV31 Installation Manual* for more information). With these assignments, configure AOt to 0 A.<br>FLt: Drive fault<br>rUn: Drive running<br>FtA: Frequency threshold reached (Ftd parameter in the SEt- menu, page 27)<br>FLA: High speed (HSP) reached<br>CtA: Current threshold reached (Ctd parameter in the SEt- menu, page 27)<br>SrA: Frequency reference reached<br>tSA: Motor thermal threshold reached (ttd parameter in the SEt- menu, page 27)<br>bLC: Brake sequence (status information only. bLC can be only be activated or deactivated from the FUn- menu, see page 70).<br>APL: Loss of 4–20 mA signal, even if LFL = nO (page 79)<br>The logic output state is 1 (24 V) when the selected assignment is active, except for FLt which is in state 1 if the drive controller is not faulted. | |
| r1 | Relay R1 | FLt |
| | nO: Not assigned<br>FLt: Drive fault<br>rUn: Drive running<br>FtA: Frequency threshold reached (Ftd parameter in the SEt- menu, page 27)<br>FLA: High speed (HSP) reached<br>CtA: Current threshold reached (Ctd parameter in the SEt- menu, page 27)<br>SrA: Frequency reference reached<br>tSA: Motor thermal threshold reached (ttd parameter in the SEt- menu, page 27)<br>APL: Loss of 4–20 mA signal, even if LFL = nO (page 79)<br>The relay is powered up when the selected assignment is active, except for FLt which is powered up if the drive controller is not faulted. | |
| r2 | Relay R2 | nO |
| | nO: Not assigned<br>FLt: Drive fault<br>rUn: Drive running<br>FtA: Frequency threshold reached (Ftd parameter in the SEt- menu, page 27)<br>FLA: High speed (HSP) reached<br>CtA: Current threshold reached (Ctd parameter in the SEt- menu, page 27)<br>SrA: Frequency reference reached<br>tSA: Motor thermal threshold reached (ttd parameter in the SEt- menu, page 27)<br>bLC: Brake sequence (status information only. bLC can be only be activated or deactivated from the FUn- menu, see page 70).<br>APL: Loss of 4–20 mA signal, even if LFL = nO (page 79)<br>The relay is powered up when the selected assignment is active, except for FLt which is powered up if the drive controller is not faulted. | |


© 2004 Schneider Electric All Rights Reserved

ENGLISH

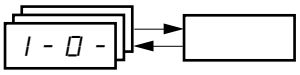


| Code | Description | Factory Setting |
|---|---|---|
| SCS | Saving the configuration[1] | nO |
| | nO: Function inactive<br>Str I: Saves the current configuration (but not the result of auto-tuning) to EEPROM. SCS automatically switches to nO as soon as the save is performed. Use this function to keep another configuration in reserve, in addition to the current configuration.<br>The drive controller is factory set with the current configuration and the backup configuration both initialized to the factory configuration.<br>If the remote keypad display is connected to the drive controller, up to four additional settings are available: FIL I, FIL 2, FIL 3, and FIL 4. Use these selections to save up to four configurations in the remote keypad display's EEPROM memory. SCS automatically switches to nO as soon as the save is performed. | |
| FCS | Return to factory settings/restore configuration[1] | nO |
| | nO: Function inactive<br>rECI: Replaces the current configuration with the backup configuration previously saved by SCS (SCS set to Strl). rECI is visible only if the backup configuration has been saved. FCS automatically changes to nO as soon as this action is performed.<br>In I: Replaces the current configuration with the factory settings. FCS automatically switches to nO as soon as this action is performed.<br>If the remote keypad display is connected to the drive controller, up to four additional selections are available corresponding to backup files loaded in the remote keypad display's EEPROM memory: FIL I, FIL 2, FIL 3, and FIL 4. These selections replace the current configuration with the corresponding backup configuration in the remote keypad display. FCS automatically changes to nO as soon as this action is performed.<br>Note: If nAd briefly appears on the display once the parameter has switched to nO, the configuration transfer is not possible and has not been performed (because the controller ratings are different, for example). If ntr briefly appears on the display once the parameter has switched to nO, a configuration transfer error has occurred and the factory settings must be restored using InI. In both cases, check the configuration to be transferred before trying again.<br>*NOTE: For rECI, InI, and FIL1 to FIL4 to take effect, you must press and hold down the ENT key for 2 s.* | |

[1] SCS and FCS can be accessed in several configuration menus, but their settings affect all menus and parameters as a whole.

© 2004 Schneider Electric All Rights Reserved

ENGLISH

## CONTROL MENU CTL-

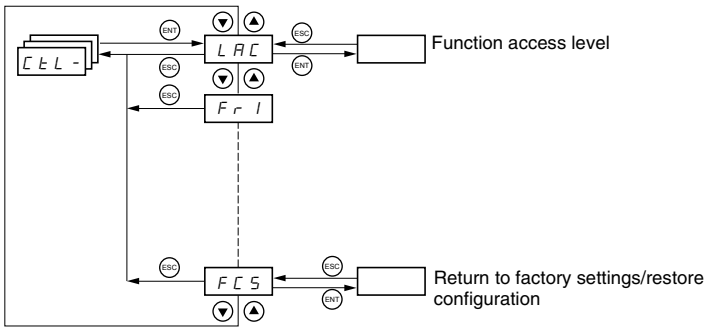


Control parameters can only be modified when the drive controller is stopped and no run command is present. This menu can be accessed with the access locking switch on the remote keypad display in the 🔓 position.

### Control Channels

Control commands, such as forward and reverse, and speed reference commands can be sent to the drive controller from the sources specified in Table 6. ATV31 drive controllers allow you to assign control and reference sources to separate control channels (Fr1, Fr2, Cd1, or Cd2, see pages 44–45) and to switch between them. For example, you might assign LCC to reference channel 1 and CAn to reference channel 2 and switch between the two reference sources. It is also possible to use separate sources for control and reference commands. This is called mixed mode operation. These functions are explained in detail in the sections beginning on page 36.

**Table 6: Control and Reference Sources**

| Control Sources (CMD) | | Reference Sources (rFr) | |
|---|---|---|---|
| tEr: | Terminal (LI) | AI1, AI2, AI3: | Terminal |
| LOC: | Drive keypad (RUN/STOP) on ATV31••••••A controllers only | AIP: | Potentiometer on ATV31••••••A only |
| LCC: | Remote keypad display (RJ45 socket) | LCC: | Drive keypad (on ATV31•••••• and ATV31••••••A controllers) or remote keypad display |
| Mdb: | Modbus (RJ45 socket) | Mdb: | Modbus (RJ45 socket) |
| CAn: | CANopen (RJ45 socket) | CAn: | CANopen (RJ45 socket) |

**⚠ WARNING**

**UNINTENDED EQUIPMENT OPERATION**

The stop buttons on ATV31••••••A drive controllers and on the remote keypad display can be programmed to not have priority. To retain stop key priority, set PSt to YES (see page 47).

**Failure to follow this instruction can result in death, serious injury, or equipment damage.**


© 2004 Schneider Electric All Rights Reserved

## Parameter LAC

Use parameter LAC (page 44) in the CtL- menu to select levels of function access and to set the control and reference sources.

1. LAC = L1: Level 1—access to standard functions. Control and reference commands come from one source. See “Parameter LAC = L1 or L2” on page 36.
2. LAC = L2: Level 2—access to all of the level 1 functions, plus the advanced functions listed below. Control and reference commands come from one source. See “Parameter LAC = L1 or L2” on page 36.
   - +/- Speed (motorized potentiometer)
   - Brake control
   - Switching for 2nd current limit
   - Motor switching
   - Management of limit switches
3. LAC = L3: Level 3—access to all of the level 2 functions. Control and reference commands can come from separate sources. See “Parameter LAC = L3” on page 37.

© 2004 Schneider Electric All Rights Reserved

ENGLISH

## Parameter LAC = L1 or L2

If parameter LAC is set to L1 or L2, the control and reference commands come from one source. The possible control and reference sources, and the settings that specify them, are:

- Control and reference via the input terminals or the drive keypad display in forced local (see FLO on page 80)
- Control and reference via the Modbus serial link
- Control and reference via the CANopen serial link
- Control and reference via the remote keypad display (see LCC on page 46)

*NOTE: Modbus or CANopen is selected online by writing the appropriate control word (refer to the protocol-specific documentation).*

The diagram below illustrates the order of priority when more than one control and reference source is specified. In the diagram, information flows from left to right. At step 1, LCC is not set to YES to enable the remote keypad display, so the drive keypad display is selected as the control and reference source. At steps 2–4, Modbus, CANopen, and forced local control are not set to YES, so the drive keypad display remains the selected source. The order of priority, therefore, is forced local, CANopen, Modbus, and the drive keypad display or the remote keypad display. For example, if forced local mode were enabled, it would have priority over any other setting. Similarly, if CANopen were enabled, it would have priority over any other setting except for FLO. Refer to the diagrams on pages 39 and 40 for more detail.

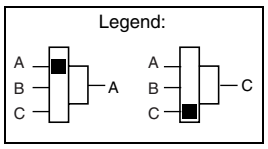


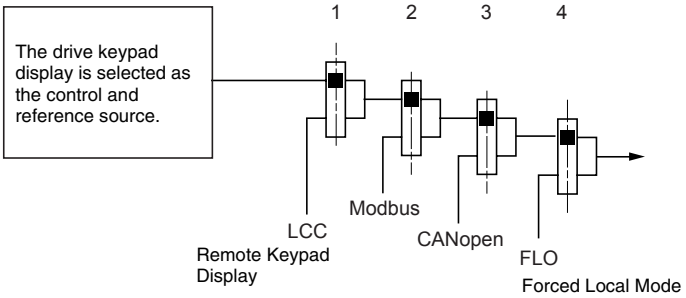


- On ATV31•••••• drive controllers with the factory configuration, control and reference commands come from the control terminals.
- On ATV31••••••A drive controllers with the factory configuration, control commands come from the drive keypad display and reference commands come from a summation of the reference potentiometer and AI1 on the control terminals.
- With a remote keypad display, if LCC = YES (see page 46), control and reference commands come from the remote keypad display. The reference frequency is set by parameter LFr in the SEt- menu (see page 24).


© 2004 Schneider Electric All Rights Reserved

ENGLISH

## Parameter LAC = L3

If parameter LAC is set to L3:

- The control and reference channels can be combined (parameter CHCF = SIM, see page 45), *or*
- The control and reference channels can be separate (parameter CHCF = SEP, see page 45)

Parameter CHCF = SIM

The following figure illustrates combined control and reference sources:

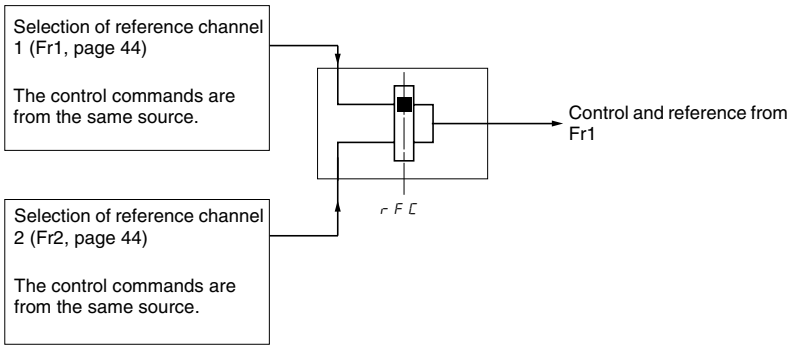


Use parameter rFC (page 45) to select reference channel Fr1 or Fr2, or to configure a logic input or a control word bit for remote switching between the two channels. Refer to the diagram on page 42.

© 2004 Schneider Electric All Rights Reserved

ENGLISH

Parameter CHCF = SEP

The following figures illustrate separate control and reference channels (parameter CHCF = SEP).

Separate Reference Channels:

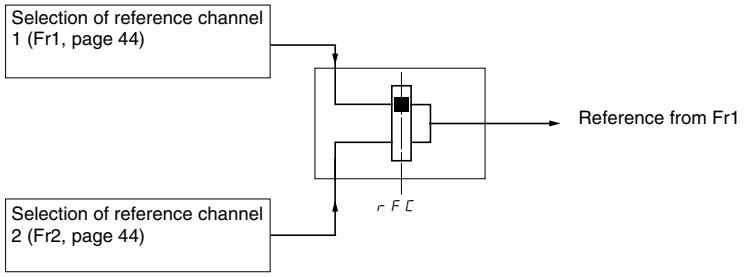


Use parameter rFC (page 45) to select reference channel Fr1 or Fr2, or to configure a logic input or a control word bit for remote switching between the two channels.

Separate Control Channels:

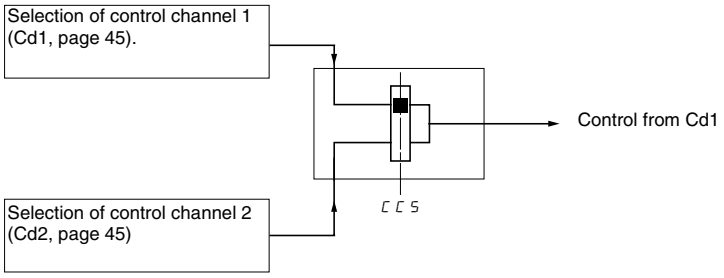


Use parameter CCS (page 46) to select control channel Cd1 or Cd2, or to configure a logic input or a control word bit for remote switching between the two channels.


© 2004 Schneider Electric All Rights Reserved

ENGLISH

## Reference Channel for LAC = L1 or L2

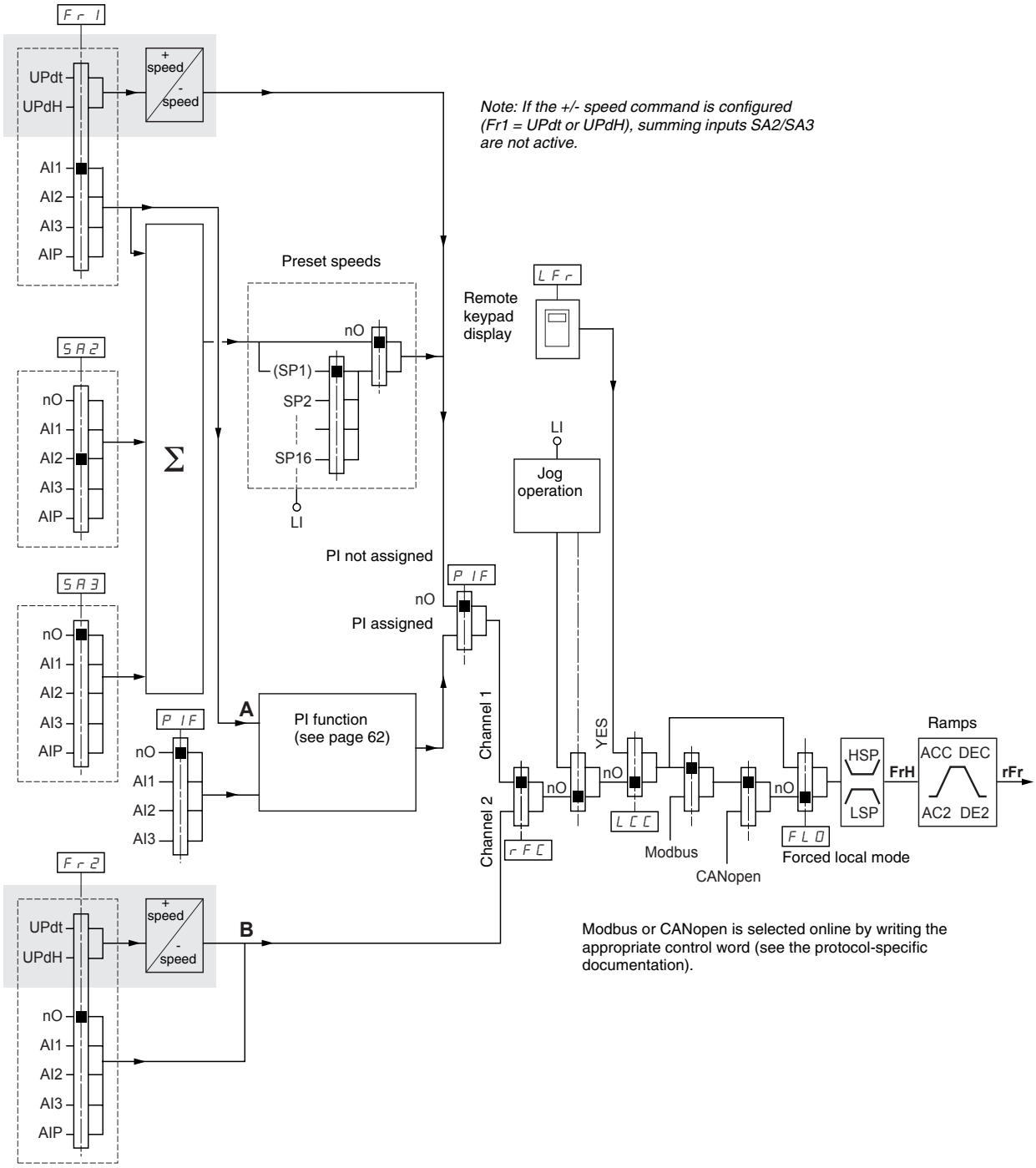


**Legend:**

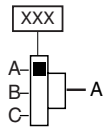


The black square represents the factory setting of parameter xxx.

Function accessible if LAC = L2

© 2004 Schneider Electric All Rights Reserved

ENGLISH

## Control Channel for LAC = L1 or L2

The settings of parameters FLO, LCC, and the selection of Modbus or CANopen protocol determine both the reference and control channels. The order of priority is FLO, CANopen, Modbus, and LCC.

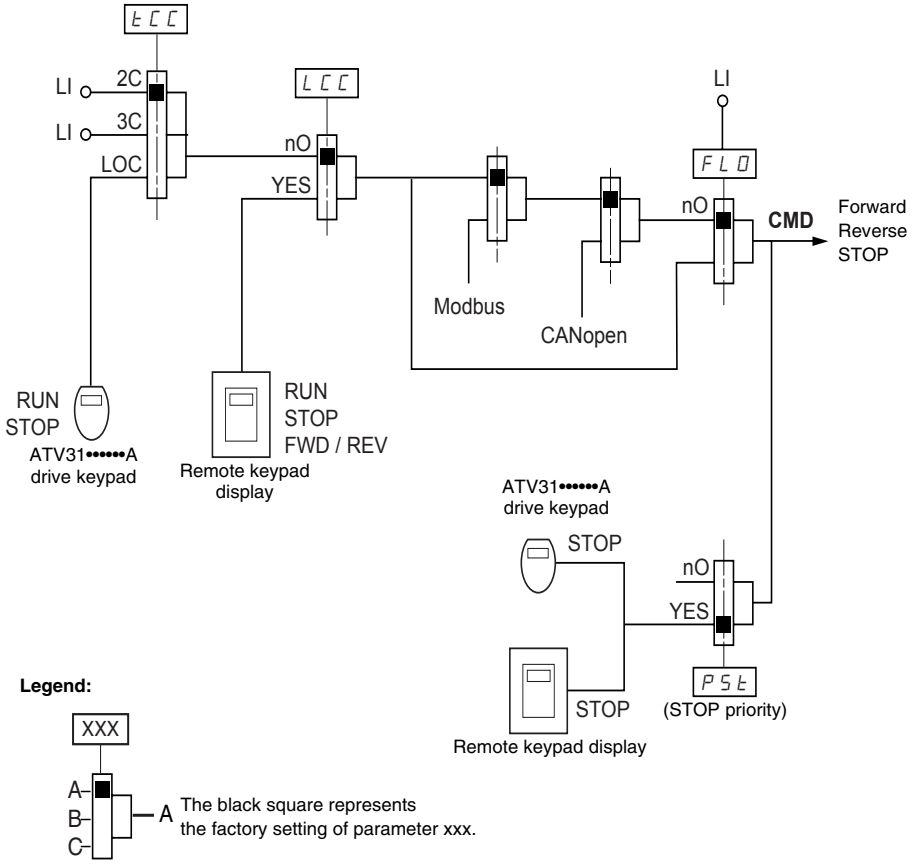



© 2004 Schneider Electric All Rights Reserved

ENGLISH

## Reference Channel for LAC = L3

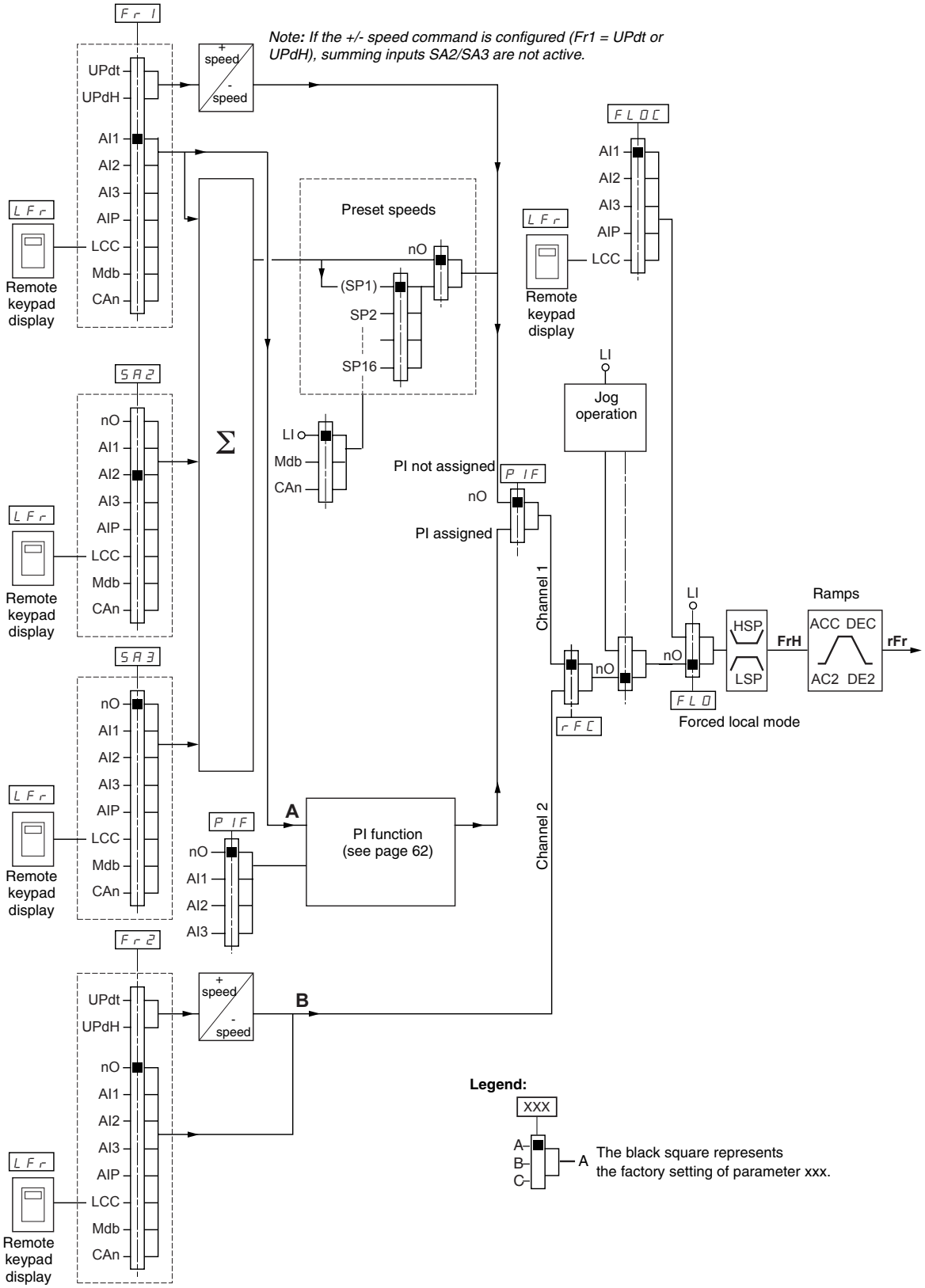

ENGLISH

## Control Channel for LAC = L3: CHCF = SIM, Combined Reference and Control

If CHCF is set to SIM (see page 45), parameters Fr1, Fr2, FLO, and FLOC determine both the reference and control source. For example, if the reference is via the analog input on the terminal block, control is via the logic input on the terminal block.

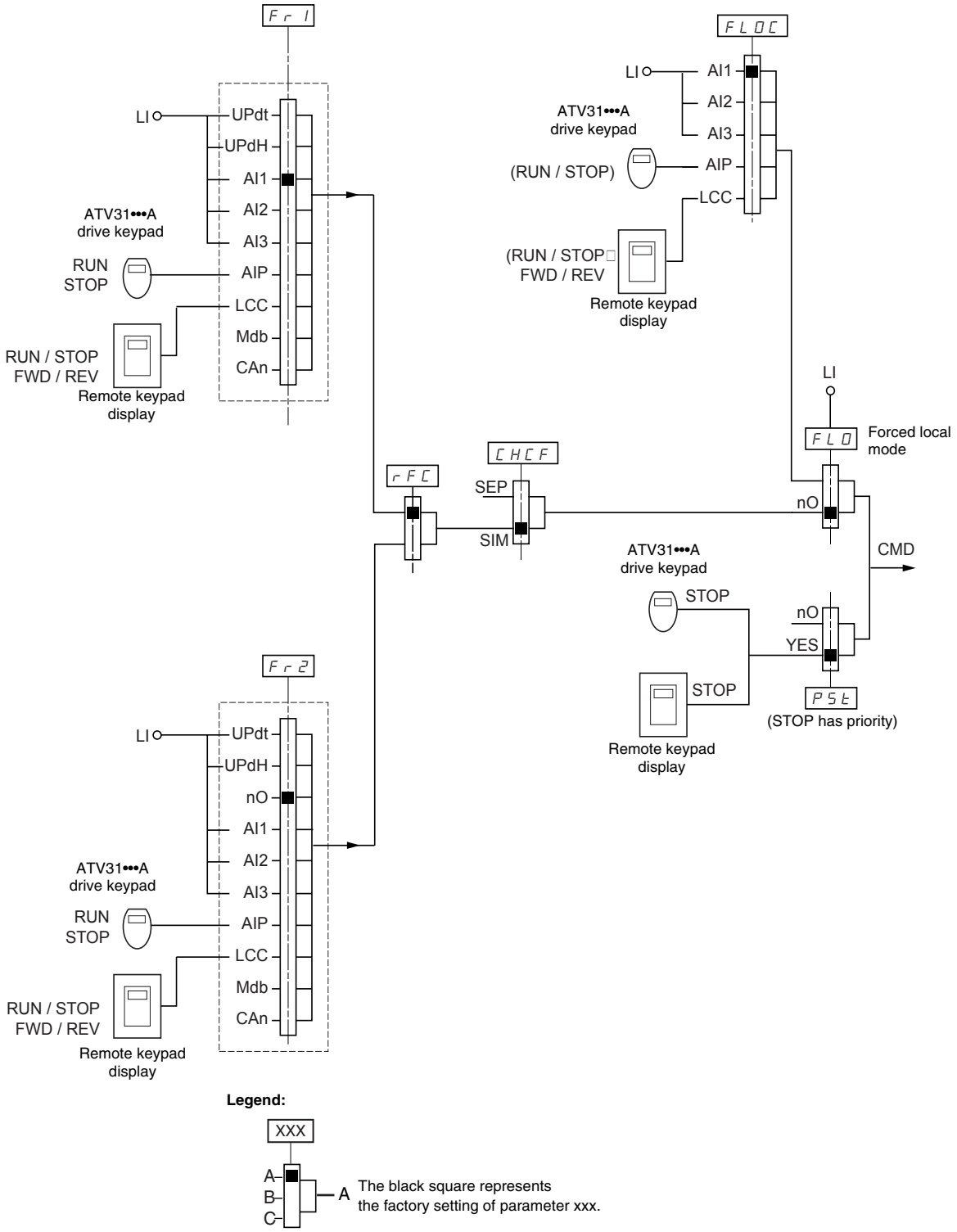



© 2004 Schneider Electric All Rights Reserved

ENGLISH

## Control Channel for LAC = L3: CHCF = SEP, Mixed Mode (Separate Reference and Control)

Parameters FLO and FLOC are common to reference and control. For example, if the reference in forced local mode is via the analog input on the terminal block, control in forced local mode is via the logic input on the terminal block.

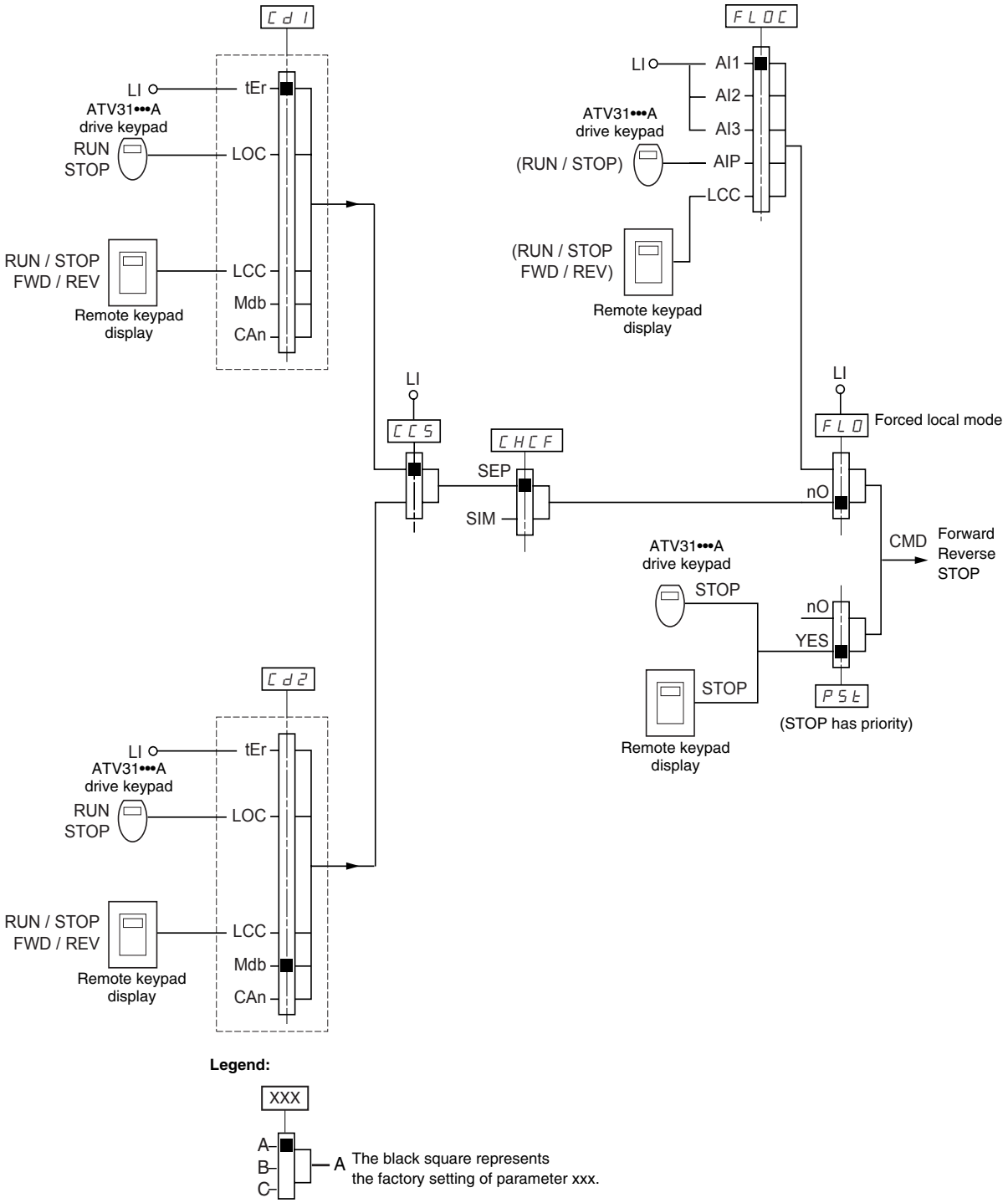

ENGLISH

Refer to the function compatibility table on page 20. It is not possible to configure incompatible control functions. The first function configured will prevent any functions that are incompatible with it from being configured.

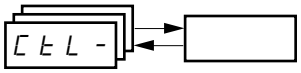


| Code | Description | Adjustment Range | Factory Setting |
|---|---|---|---|
| LAC | Function access level | See below. | L1 |
| | L1: Level 1—access to standard functions.<br>L2: Level 2—access to the level 1 functions plus the following advanced functions in the FUn- menu:<br>• +/- speed<br>• Brake control<br>• Switching for second current limit<br>• Motor switching<br>• Management of limit switches<br>L3: Level 3—access to all of the level 2 functions plus mixed mode operation.<br>Assigning L3 to LAC restores parameters Fr1 (below), Cd1 (page 45), CHCF (page 45), and tCC (page 31) to their factory settings (on ATV31••••••A drive controllers, tCC is reset to 2C).<br>If LAC is set to L3, you must restore the factory setting with parameter FCS (page 47) to set LAC back to L1 or to change it to L2.<br>If LAC is set to L2, you must restore the factory setting with parameter FCS to set LAC back to L1.<br>If LAC is set to L2, you can change LAC to L3 without using parameter FCS.<br>*NOTE: In order to change the assignment of LAC, you must press and hold down the ENT key for 2 seconds.* | | |
| Fr1 | Configuration of reference 1 | See below. | AI1<br>AIP for ATV31••••••A |
| | AI1: Analog input AI1<br>AI2: Analog input AI2<br>AI3: Analog input AI3<br>AIP: Potentiometer (ATV31••••••A)<br><br>If LAC = L2 or L3, the following additional assignments are possible:<br>UPdt: + speed/- speed via LI[1]<br>UPdH: + speed/- speed via ▲▼ on the drive keypad display (ATV31 or ATV31••••••A) or on the remote keypad display. For operation, display the frequency rFr (see page 83).[1]<br><br>If LAC = L3, the following additional assignments are possible:<br>LCC: Reference via the remote keypad display, LFr parameter in the SEt- menu page 24.<br>Mdb: Reference via Modbus<br>CAn: Reference via CANopen | | |
| Fr2 | Configuration of reference 2 | See below. | nO |
| | nO: Not assigned<br>AI1: Analog input AI1<br>AI2: Analog input AI2<br>AI3: Analog input AI3<br>AIP: Potentiometer (ATV31••••••A only)<br><br>If LAC = L2 or L3, the following additional assignments are possible:<br>UPdt: + speed/- speed via LI[1]<br>UPdH:+ speed/- speed via ▲▼ on the drive keypad display (ATV31 or ATV31••••••A) or on the remote keypad display. For operation, display the frequency rFr (see page 83).[1]<br><br>If LAC = L3, the following additional assignments are possible:<br>LCC: Reference via the remote keypad display, LFr parameter in the SEt- menu page 24.<br>Mdb: Reference via Modbus<br>CAn: Reference via CANopen | | |

[1] Only one of the UPdt/UPdH assignments is permitted on each reference channel.


© 2004 Schneider Electric All Rights Reserved

ENGLISH

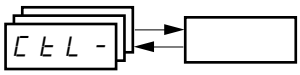


| Code | Description | Adjustment Range | Factory Setting |
|---|---|---|---|
| rFC | Reference switching | See below. | Fr1 |
| | Use parameter rFC to select channel Fr1 or Fr2, or to configure a logic input or a control bit for remote switching of Fr1 or Fr2.<br>Fr1: Reference = Reference 1<br>Fr2: Reference = Reference 2<br>LI1: Logic input LI1<br>LI2: Logic input LI2<br>LI3: Logic input LI3<br>LI4: Logic input LI4<br>LI5: Logic input LI5<br>LI6: Logic input LI6<br><br>If LAC = L3, the following additional assignments are possible:<br>C111: Bit 11 of the Modbus control word<br>C112: Bit 12 of the Modbus control word<br>C113: Bit 13 of the Modbus control word<br>C114: Bit 14 of the Modbus control word<br>C115: Bit 15 of the Modbus control word<br>C211: Bit 11 of the CANopen control word<br>C212: Bit 12 of the CANopen control word<br>C213: Bit 13 of the CANopen control word<br>C214: Bit 14 of the CANopen control word<br>C215: Bit 15 of the CANopen control word<br><br>The reference can be switched with the drive controller running.<br>Fr1 is active when the logic input or control word bit is in state 0.<br>Fr2 is active when the logic input or control word bit is in state 1. | | |
| CHCF | Mixed mode (separate control and reference channels) | See below. | SIM |
| | CHCF can be accessed if LAC = L3.<br>SIM: Combined control and reference channels<br>SEP: Separate control and reference channels | | |
| Cd1 | Configuration of control channel 1 | See below. | tEr<br>LOC for<br>ATV31••••••A |
| | Cd1 can be accessed if CHCF = SEP and LAC = L3.<br>tEr: Terminal block control<br>LOC: Drive keypad display control (ATV31••••••A only)<br>LCC: Remote keypad display control<br>Mdb: Control via Modbus<br>CAn: Control via CANopen | | |
| Cd2 | Configuration of control channel 2 | See below. | Mdb: |
| | Cd2 can be accessed if CHCF = SEP and LAC = L3.<br>tEr: Terminal block control<br>LOC: Drive keypad display control (ATV31••••••A only)<br>LCC: Remote keypad display control<br>Mdb: Control via Modbus<br>CAn: Control via CANopen | | |

These parameters only appear if the function has been enabled.

© 2004 Schneider Electric All Rights Reserved

ENGLISH

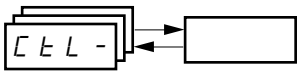


| Code | Description | Adjustment Range | Factory Setting |
|---|---|---|---|
| CCS | Control channel switching | See below. | Cd1 |
| | CCS can be accessed if CHCF = SEP and LAC = L3. Use parameter CCS to select channel Cd1 or Cd2, or to configure a logic input or a control bit for remote switching of Cd1 or Cd2.<br>Cd1: Control channel = Channel 1<br>Cd2: Control channel = Channel 2<br>LI1: Logic input LI1<br>LI2: Logic input LI2<br>LI3: Logic input LI3<br>LI4: Logic input LI4<br>LI5: Logic input LI5<br>LI6: Logic input LI6<br>C111: Bit 11 of the Modbus control word<br>C112: Bit 12 of the Modbus control word<br>C113: Bit 13 of the Modbus control word<br>C114: Bit 14 of the Modbus control word<br>C115: Bit 15 of the Modbus control word<br>C211: Bit 11 of the CANopen control word<br>C212: Bit 12 of the CANopen control word<br>C213: Bit 13 of the CANopen control word<br>C214: Bit 14 of the CANopen control word<br>C215: Bit 15 of the CANopen control word<br>Channel 1 is active when the input or control word bit is in state 0.<br>Channel 2 is active when the input or control word bit is in state 1. | | |
| COP | Copy channel 1 to channel 2. (The copy is possible only in this direction.) | See below. | nO |
| | COP can be accessed if LAC = L3.<br>nO: No copy<br>SP: Copy reference<br>Cd: Copy control<br>ALL: Copy control and reference<br>If channel 2 is controlled via the terminal block, channel 1 control is not copied.<br>If channel 2 reference is set via AI1, AI2, AI3, or AIP, channel 1 reference is not copied.<br>The reference copied is FrH (before the ramp) unless the channel 2 reference is set via +/- speed. In this case, the reference copied is rFr (after ramp).<br>*NOTE: Copying the control and/or the reference may change the direction of rotation.* | | |
| LCC | Control via the remote keypad display | See below. | nO |
| | LCC can only be accessed if the drive controller is equipped with a remote keypad display, and if LAC = L1 or L2.<br>nO: Function inactive<br>YES: Enables control of the drive controller with the STOP/RESET, RUN, and FWD/REV buttons on the remote keypad display. The speed reference is given by parameter LFr in the SEt- menu. Only the freewheel, fast stop, and DC injection stop commands remain active on the terminal block.<br>If the remote keypad display is not connected, the drive controller will lock on an SLF fault. | | |

These parameters only appear if the function has been enabled.


© 2004 Schneider Electric All Rights Reserved

ENGLISH

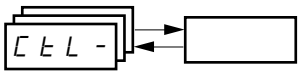


| Code | Description | Adjustment Range | Factory Setting |
|---|---|---|---|
| PSt | Stop priority | See below. | YES |
| | PSt gives priority to the STOP key on the drive keypad display (ATV31••••••A only) or on the remote keypad display, regardless of the control channel selected (terminal block or communication bus). If set to nO, the active control channel has priority. If the active control channel is the local or remote keypad display, the stop button retains priority, regardless of the setting of PSt.<br>*NOTE: To change the assignment of PSt, you must press and hold down the ENT key for 2 seconds*<br>nO: Function inactive<br>YES: STOP key priority<br>**⚠ WARNING**<br>**DISABLED STOP COMMAND**<br>Disabling the stop key on the drive keypad display or the remote keypad display will prevent the drive controller from stopping when the stop key is pressed. An external stop command must be installed to stop the motor.<br>**Failure to follow this instruction can result in death, serious injury, or equipment damage.** | | |
| rOt | Direction of operation | See below. | dFr |
| | Direction of operation allowed for the RUN key on the drive keypad display (ATV31••••••A only) or on the remote keypad display.<br>dFr: Forward<br>drS: Reverse<br>bOt: On ATV31•••••• drive controllers, both directions are authorized; on ATV31••••••A controllers, only the forward direction is possible. | | |
| SCS | Saving the configuration[1] | See below. | See below. |
| | nO: Function inactive<br>Str1: Saves the current configuration (but not the result of auto-tuning) to EEPROM. SCS automatically switches to nO as soon as the save is performed. Use this function to keep another configuration in reserve, in addition to the current configuration.<br>The drive controller is factory set with the current configuration and the backup configuration both initialized to the factory configuration.<br>If the remote keypad display is connected to the drive controller, up to four additional settings are available: FIL1, FIL2, FIL3, and FIL4. Use these selections to save up to four configurations in the remote keypad display's EEPROM memory. SCS automatically switches to nO as soon as the save is performed. | | |
| FCS | Return to factory settings/Restore configuration[1] | See below. | See below. |
| | nO: Function inactive<br>rECI: Replaces the current configuration with the backup configuration previously saved by SCS (SCS set to Strl). rECI is visible only if the backup configuration has been saved. FCS automatically changes to nO as soon as this action is performed.<br>In1: Replaces the current configuration with the factory settings. FCS automatically switches to nO as soon as this action is performed.<br>If the remote keypad display is connected to the drive controller, up to four additional selections are available corresponding to backup files loaded in the remote keypad display's EEPROM memory: FIL1, FIL2, FIL3, and FIL4. These selections replace the current configuration with the corresponding backup configuration in the remote keypad display. FCS automatically changes to nO as soon as this action is performed.<br>Note: If nAd briefly appears on the display once the parameter has switched to nO, the configuration transfer is not possible and has not been performed (because the controller ratings are different, for example). If ntr briefly appears on the display once the parameter has switched to nO, a configuration transfer error has occurred and the factory settings must be restored using InI. In both cases, check the configuration to be transferred before trying again.<br>*NOTE: For rECI, InI, and FIL1 to FIL4 to take effect, you must press and hold down the ENT key for 2 s.* | | |

[1] SCS and FCS can be accessed in several configuration menus, but their settings affect all menus and parameters as a whole.

© 2004 Schneider Electric All Rights Reserved

ENGLISH

## APPLICATION FUNCTIONS MENU FUN-

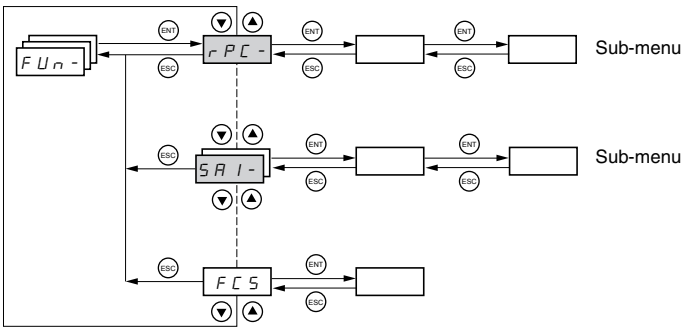


Application function parameters can only be modified when the drive controller is stopped and with no run command present. On the remote keypad display, this menu can be accessed with the access locking switch in the 🔓 position.

Some functions in this menu have numerous parameters. To simplify programming and to minimize scrolling, these functions are grouped into sub-menus. Like menus, sub-menus are identified by a dash. For example, LIA- is a sub-menu, but LIn is a parameter.

It is not possible to configure incompatible application functions. The first function configured will prevent any functions that are incompatible with it from being configured. Refer to the function compatibility table on page 20.


© 2004 Schneider Electric All Rights Reserved

ENGLISH

| Sub-menu | Parameter | Description | Adjustment Range | Factory Setting |
|---|---|---|---|---|
| rPC- | | Ramp adjustment | | |
| | rPt | Ramp type<br>Defines the shape of the acceleration and deceleration ramps. | | LIn |
| | | LIn: Linear<br>S: S ramp<br>U: U ramp<br>CUS: Customized<br><br>S ramps<br> 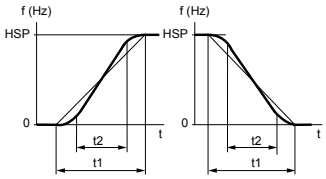 <br><br>The curve coefficient is fixed,<br>with t2 = 0.6 x t1<br>with t1 = set ramp time.<br><br>U ramps<br> 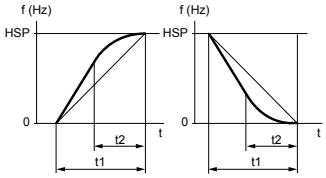 <br><br>The curve coefficient is fixed,<br>with t2 = 0.5 x t1<br>with t1 = set ramp time.<br><br>Customized ramps<br> 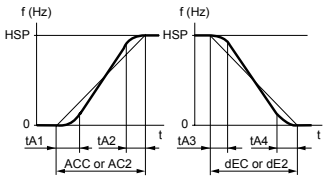 <br><br>tA1: Can be set between 0 and 100% (of ACC or AC2)<br>tA2: Can be set between 0 and (100% - tA1) (of ACC or AC2)<br>tA3: Can be set between 0 and 100% (of dEC or dE2)<br>tA4: Can be set between 0 and (100% - tA3) (of dEC or dE2) | | |
| | tA1 | Start of CUS-type acceleration ramp rounded as a percentage of total ramp time (ACC or AC2). | 0 to 100% | 10% |

These parameters only appear if the function has been enabled.

© 2004 Schneider Electric All Rights Reserved

ENGLISH

| Sub-menu | Parameter | Description | Adjustment Range | Factory Setting |
|---|---|---|---|---|
| rPC- (continued) | tA2 | End of CUS-type acceleration ramp rounded as a percentage of total ramp time (ACC or AC2) | 0 to (100% - tA1) | 10% |
| | tA3 | Start of CUS-type deceleration ramp rounded as a percentage of total ramp time (dEC or dE2) | 0 to 100% | 10% |
| | tA4 | End of CUS-type deceleration ramp as a percentage of total ramp time (dEC or dE2) | 0 to (100% - tA3) | 10% |
| | ACC<br>dEC | Acceleration and deceleration ramp times[1] | 0.1 to 999.9 s | 3 s |
| | | Acceleration ramp time for the motor to go from 0 Hz to FrS (parameter in the drC- menu, see page 28).<br>Deceleration ramp time for the motor to go from FrS to 0 Hz. Ensure that the value of dEC is not set too low for the load. | | |
| | rPS | Ramp switching | See below. | nO |
| | | This function remains active regardless of the control channel.<br>nO: Not assigned<br>LI1: Logic input LI1<br>LI2: Logic input LI2<br>LI3: Logic input LI3<br>LI4: Logic input LI4<br>LI5: Logic input LI5<br>LI6: Logic input LI6<br><br>If LAC = L3, the following assignments are possible:<br>Cd11: Bit 11 of the Modbus or CANopen control word<br>Cd12: Bit 12 of the Modbus or CANopen control word<br>Cd13: Bit 13 of the Modbus or CANopen control word<br>Cd14: Bit 14 of the Modbus or CANopen control word<br>Cd15: Bit 15 of the Modbus or CANopen control word<br><br>ACC and dEC are enabled when the logic input or control word bit is in state 0.<br>AC2 and dE2 are enabled when the logic input or control word bit is in state 1. | | |
| | Frt | Ramp switching threshold | 0 to 500 Hz | 0 |
| | | The second ramp is switched if the value of Frt is not equal to 0 and the output frequency is greater than Frt. Setting Frt to 0 deactivates it.<br>Ramp switching threshold can be combined with switching via a logic input or a control word bit as follows: | | |

| LI or bit | Frequency | Ramp |
|---|---|---|
| 0 | <Frt | ACC, dEC |
| 0 | >Frt | AC2, dE2 |
| 1 | <Frt | AC2, dE2 |
| 1 | >Frt | AC2, dE2 |

| Sub-menu | Parameter | Description | Adjustment Range | Factory Setting |
|---|---|---|---|---|
| | AC2 | 2nd acceleration ramp time[1]:<br>Enabled via logic input (rPS) or frequency threshold (Frt). | 0.1 to 999.9 s | 5 s |
| | dE2 | 2nd deceleration ramp time[1]:<br>Enabled via logic input (rPS) or frequency threshold (Frt). | 0.1 to 999.9 s | 5 s |
| | brA | Deceleration ramp adaptation | See below. | YES |
| | | Activating this function automatically adapts the deceleration ramp if it has been set at too low a value for the inertia of the load.<br>nO: Function inactive<br>YES: Function active<br>brA is incompatible with applications requiring positioning on a ramp or the use of a braking resistor.<br>brA is forced to nO if brake control (bLC) is assigned (page 70). | | |

[1] Can also be accessed in the Settings menu, SEt-. See page 23.

These parameters only appear if the function has been enabled.


© 2004 Schneider Electric All Rights Reserved

ENGLISH

| Sub-menu | Parameter | Description | Adjustment Range | Factory Setting |
|---|---|---|---|---|
| StC- | | Stop modes | | |
| | Stt | Normal stop type | See below. | RMP |
| | | Type of stop executed when the run command disappears or a stop command appears.<br>rMP: Follow ramp<br>FSt: Fast stop<br>nSt: Freewheel stop<br>dCI: DC injection stop | | |
| | FSt | Fast stop via logic input | See below. | nO |
| | | nO: Not assigned<br>LI1: Logic input LI1<br>LI2: Logic input LI2<br>LI3: Logic input LI3<br>LI4: Logic input LI4<br>LI5: Logic input LI5<br>LI6: Logic input LI6<br>If LAC = L3, the following assignments are possible:<br>Cd11: Bit 11 of the Modbus or CANopen control word<br>Cd12: Bit 12 of the Modbus or CANopen control word<br>Cd13: Bit 13 of the Modbus or CANopen control word<br>Cd14: Bit 14 of the Modbus or CANopen control word<br>Cd15: Bit 15 of the Modbus or CANopen control word<br>Fast stop is activated when the state of the logic input changes to 0 or the control word bit changes to 1. Fast stop is a stop on the deceleration reduced by the coefficient specified by parameter dCF. If the logic input falls back to state 1 and the run command is still active, the motor will only restart if 2-wire control is configured (tCC = 2C and tCt = LEL or PFO, see page 31). Otherwise, a new run command must be sent. | | |
| | dCF | Coefficient for dividing the deceleration ramp time for fast stopping. | 0, 1 to 10 | 4 |
| | | This parameter only appears if FST is assigned. Ensure that the reduced ramp is not too low for the load. The value 0 corresponds to the minimum ramp. | | |
| | dCI | DC injection via logic input | See below. | nO |
| | | nO: Not assigned<br>LI1: Logic input LI1<br>LI2: Logic input LI2<br>LI3: Logic input LI3<br>LI4: Logic input LI4<br>LI5: Logic input LI5<br>LI6: Logic input LI6<br>If LAC = L3, the following assignments are possible:<br>Cd11: Bit 11 of the Modbus or CANopen control word<br>Cd12: Bit 12 of the Modbus or CANopen control word<br>Cd13: Bit 13 of the Modbus or CANopen control word<br>Cd14: Bit 14 of the Modbus or CANopen control word<br>Cd15: Bit 15 of the Modbus or CANopen control word<br>Braking is activated when the state of the logic input or control word bit is 1. | | |
| | IdC | Level of DC injection braking current activated via logic input or selected as stop mode [1, 2] | 0 to In [3] | 0.7 In [3] |
| | | After 5 seconds, the injection current is peak limited at 0.5 Ith. | | |
| | tdC | Total DC injection braking time when dCI is selected as the normal stop type (see Stt above). [1, 2] | 0.1 to 30 s | 0.5 s |

[1] Can also be accessed in the Settings menu, SEt-. See page 23.

[2] These settings are not related to the automatic DC injection function.

[3] In corresponds to the nominal drive current indicated in the *ATV31 Installation Manual* and on the drive controller nameplate.

These parameters only appear if the function has been enabled.

© 2004 Schneider Electric All Rights Reserved

ENGLISH

| Sub-menu | Parameter | Description | Adjustment Range | Factory Setting |
|---|---|---|---|---|
| StC- (continued) | nSt | Freewheel stop via logic input | | nO |
| | | nO: Not assigned<br>LI1: Logic input LI1<br>LI2: Logic input LI2<br>LI3: Logic input LI3<br>LI4: Logic input LI4<br>LI5: Logic input LI5<br>LI6: Logic input LI6<br><br>Freewheel stop is activated when the logic input is at state 0. If the input returns to state 1 and the run command is still active, the motor will only restart if 2-wire control is configured. Otherwise, a new run command must be sent. | | |

## ⚠ WARNING

**NO HOLDING TORQUE**

- DC injection braking does not provide holding torque at zero speed.
- DC injection braking does not function during a loss of power or during a drive controller fault.
- When required, use a separate brake for holding torque.

**EXCESSIVE DC INJECTION BRAKING**

- Application of DC injection braking for long periods of time can cause motor overheating and damage.
- Protect the motor from extended periods of DC injection braking.

**Failure to follow these instructions can result in death, serious injury, or equipment damage.**


© 2004 Schneider Electric All Rights Reserved

ENGLISH

| Sub-menu | Parameter | Description | Adjustment Range | Factory Setting |
|---|---|---|---|---|
| AdC- | | Automatic DC injection. See page 51. | | |
| | AdC | Automatic DC injection<br>(at the end of the ramp) | See below. | YES |
| | | nO: No injection<br>YES: DC injection for an adjustable period<br>Ct: Continuous DC injection<br>*NOTE: If this parameter is set to Yes or Ct, DC current is injected even if a run command has not been sent. The parameter can be accessed with the drive controller running.* | | |
| | tdC1 | Automatic injection time [1] | 0.1 to 30 s | 0.5 s |
| | SdC1 | Level of automatic DC injection current [1] | 0 to 1.2 In [2] | 0.7 In [2] |
| | | Note: Ensure that the motor will withstand this current without overheating. | | |
| | tdC2 | 2nd automatic DC injection time [1] | 0 to 30 s | 0 s |
| | SdC2 | 2nd level of automatic DC injection current [1] | 0 to 1.2 In [2] | 0.5 In [2] |
| | | ***NOTE: Ensure that the motor will withstand this current without overheating.*** | | |

| AdC | SdC2 | Operation |
|---|---|---|
| YES | x | |
| Ct | ≠ 0 | |
| Ct | = 0 | |
| Run command | | |
| Speed | | |

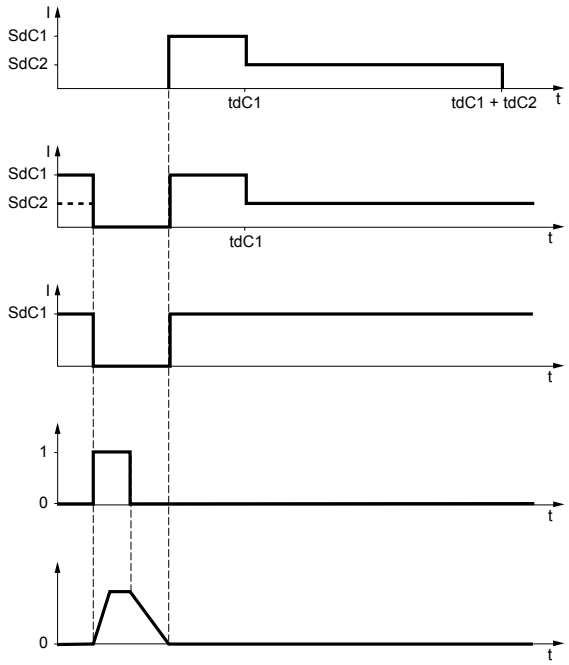


[1] Can also be accessed in the Settings menu, SEt-. See page 23.

[2] In corresponds to the nominal drive current indicated in the *ATV31 Installation Manual* and on the drive controller nameplate.

These parameters only appear if the function has been enabled.

© 2004 Schneider Electric All Rights Reserved

ENGLISH

| Sub-menu | Parameter | Description | Adjustment Range | Factory Setting |
|---|---|---|---|---|
| SA1- | | Summing inputs<br>Can be used to sum one or two inputs with reference Fr1. | | |
| | SA2 | Summing input 2 | See below. | AI2 |
| | | nO: Not assigned<br>AI1: Analog input AI1<br>AI2: Analog input AI2<br>AI3: Analog input AI3<br>AIP: Potentiometer (ATV31••••••A drive controllers only)<br><br>If LAC = L3, the following assignments are possible:<br>Mdb: Reference via Modbus<br>CAn: Reference via CANopen<br>LCC: Reference via the remote keypad display, LFr parameter in the SEt- menu page 24. | | |
| | SA3 | Summing input 3 | See below. | nO |
| | | nO: Not assigned<br>AI1: Analog input AI1<br>AI2: Analog input AI2<br>AI3: Analog input AI3<br>AIP: Potentiometer (ATV31••••••A drive controllers only)<br><br>If LAC = L3, the following assignments are possible:<br>Mdb: Reference via Modbus<br>CAn: Reference via CANopen<br>LCC: Reference via the remote keypad display (LFr parameter in the SEt- menu. See page 24.) | | |

## Summing Inputs

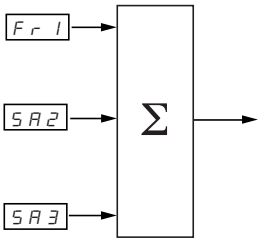


*NOTE: AI2 is an input, ± 10 V, which can allow a subtraction by summing a negative signal.*

Refer to the diagrams on pages 39 and 41.


© 2004 Schneider Electric All Rights Reserved

ENGLISH

## Preset Speeds

Parameter PSS, preset speeds, allows 2, 4, 8, or 16 preset speeds, requiring 1, 2, 3, or 4 logic inputs respectively.

The preset speeds must be assigned in the following order: PS2, then PS4, then PS8, then PS16.

Refer to the following table for combining inputs to activate the various preset speeds:

| 16 speeds LI (PS16) | 8 speeds LI (PS8) | 4 speeds LI (PS4) | 2 speeds LI (PS2) | Speed reference |
|---|---|---|---|---|
| 0 | 0 | 0 | 0 | Reference [1] |
| 0 | 0 | 0 | 1 | SP2 |
| 0 | 0 | 1 | 0 | SP3 |
| 0 | 0 | 1 | 1 | SP4 |
| 0 | 1 | 0 | 0 | SP5 |
| 0 | 1 | 0 | 1 | SP6 |
| 0 | 1 | 1 | 0 | SP7 |
| 0 | 1 | 1 | 1 | SP8 |
| 1 | 0 | 0 | 0 | SP9 |
| 1 | 0 | 0 | 1 | SP10 |
| 1 | 0 | 1 | 0 | SP11 |
| 1 | 0 | 1 | 1 | SP12 |
| 1 | 1 | 0 | 0 | SP13 |
| 1 | 1 | 0 | 1 | SP14 |
| 1 | 1 | 1 | 0 | SP15 |
| 1 | 1 | 1 | 1 | SP16 |

[1] See the diagrams on page 39 and page 41: Reference 1 = (SP1).

© 2004 Schneider Electric All Rights Reserved

ENGLISH

| Sub-menu | Parameter | Description | Adjustment Range | Factory Setting |
|---|---|---|---|---|
| PSS- | | Preset speeds | | |
| | PS2 | 2 preset speeds | See below. | If tCC = 2C: LI3<br>If tCC = 3C: nO<br>If tCC = LOC: LI3 |
| | | Selecting the assigned logic input activates the function.<br>nO: Not assigned<br>LI1: Logic input LI1<br>LI2: Logic input LI2<br>LI3: Logic input LI3<br>LI4: Logic input LI4<br>LI5: Logic input LI5<br>LI6: Logic input LI6<br><br>If LAC = L3, the following assignments are possible:<br><br>Cd11: Bit 11 of the Modbus or CANopen control word<br>Cd12: Bit 12 of the Modbus or CANopen control word<br>Cd13: Bit 13 of the Modbus or CANopen control word<br>Cd14: Bit 14 of the Modbus or CANopen control word<br>Cd15: Bit 15 of the Modbus or CANopen control word | | |
| | PS4 | 4 preset speeds | See below. | If tCC = 2C: LI4<br>If tCC = 3C: nO<br>If tCC = LOC: LI4 |
| | | Selecting the assigned logic input activates the function.<br>*NOTE: Ensure that PS2 has been assigned before assigning PS4.*<br>nO: Not assigned<br>LI1: Logic input LI1<br>LI2: Logic input LI2<br>LI3: Logic input LI3<br>LI4: Logic input LI4<br>LI5: Logic input LI5<br>LI6: Logic input LI6<br><br>If LAC = L3, the following assignments are possible:<br><br>Cd11: Bit 11 of the Modbus or CANopen control word<br>Cd12: Bit 12 of the Modbus or CANopen control word<br>Cd13: Bit 13 of the Modbus or CANopen control word<br>Cd14: Bit 14 of the Modbus or CANopen control word<br>Cd15: Bit 15 of the Modbus or CANopen control word | | |
| | PS8 | 8 preset speeds | See below. | nO |
| | | Selecting the assigned logic input activates the function.<br>*NOTE: Ensure that PS4 has been assigned before assigning PS8.*<br>nO: Not assigned<br>LI1: Logic input LI1<br>LI2: Logic input LI2<br>LI3: Logic input LI3<br>LI4: Logic input LI4<br>LI5: Logic input LI5<br>LI6: Logic input LI6<br><br>If LAC = L3, the following assignments are possible:<br><br>Cd11: Bit 11 of the Modbus or CANopen control word<br>Cd12: Bit 12 of the Modbus or CANopen control word<br>Cd13: Bit 13 of the Modbus or CANopen control word<br>Cd14: Bit 14 of the Modbus or CANopen control word<br>Cd15: Bit 15 of the Modbus or CANopen control word | | |


© 2004 Schneider Electric All Rights Reserved

ENGLISH

| Sub-menu | Parameter | Description | Adjustment Range | Factory Setting |
|---|---|---|---|---|
| | PS16 | 16 preset speeds | See below. | nO |
| | | Selecting the assigned logic input activates the function.<br>*NOTE: Ensure that PS8 has been assigned before assigning PS16.*<br>nO: Not assigned<br>LI1: Logic input LI1<br>LI2: Logic input LI2<br>LI3: Logic input LI3<br>LI4: Logic input LI4<br>LI5: Logic input LI5<br>LI6: Logic input LI6<br><br>If LAC = L3, the following assignments are possible:<br><br>Cd11: Bit 11 of the Modbus or CANopen control word<br>Cd12: Bit 12 of the Modbus or CANopen control word<br>Cd13: Bit 13 of the Modbus or CANopen control word<br>Cd14: Bit 14 of the Modbus or CANopen control word<br>Cd15: Bit 15 of the Modbus or CANopen control word | | |
| | SP2 | 2nd preset speed [1] | 0.0 to 500.0 Hz | 10 Hz |
| | SP3 | 3rd preset speed [1] | 0.0 to 500.0 Hz | 15 Hz |
| | SP4 | 4th preset speed [1] | 0.0 to 500.0 Hz | 20 Hz |
| | SP5 | 5th preset speed [1] | 0.0 to 500.0 Hz | 25 Hz |
| | SP6 | 6th preset speed [1] | 0.0 to 500.0 Hz | 30 Hz |
| | SP7 | 7th preset speed [1] | 0.0 to 500.0 Hz | 35 Hz |
| | SP8 | 8th preset speed [1] | 0.0 to 500.0 Hz | 40 Hz |
| | SP9 | 9th preset speed [1] | 0.0 to 500.0 Hz | 45 Hz |
| | SP10 | 10th preset speed [1] | 0.0 to 500.0 Hz | 50 Hz |
| | SP11 | 11th preset speed [1] | 0.0 to 500.0 Hz | 55 Hz |
| | SP12 | 12th preset speed [1] | 0.0 to 500.0 Hz | 60 Hz |
| | SP13 | 13th preset speed [1] | 0.0 to 500.0 Hz | 70 Hz |
| | SP14 | 14th preset speed [1] | 0.0 to 500.0 Hz | 80 Hz |
| | SP15 | 15th preset speed [1] | 0.0 to 500.0 Hz | 90 Hz |
| | SP16 | 16th preset speed [1] | 0.0 to 500.0 Hz | 100 Hz |

[1] Can also be accessed in the Settings menu, SEt-. See page 23.

These parameters only appear if the function has been enabled.

© 2004 Schneider Electric All Rights Reserved

ENGLISH

| Sub-menu | Parameter | Description | Adjustment Range | Factory Setting |
|---|---|---|---|---|
| JOG- | | Jog operation | | |
| | JOG | Jog operation | See below. | If tCC = 2C: nO<br>If tCC = 3C: LI4<br>If tCC = LOC: nO |
| | | Selecting the assigned logic input activates the function.<br>nO: Not assigned<br>LI1: Logic input LI1<br>LI2: Logic input LI2<br>LI3: Logic input LI3<br>LI4: Logic input LI4<br>LI5: Logic input LI5<br>LI6: Logic input LI6<br><br>Example: 2-wire control operation (tCC = 2C)<br> 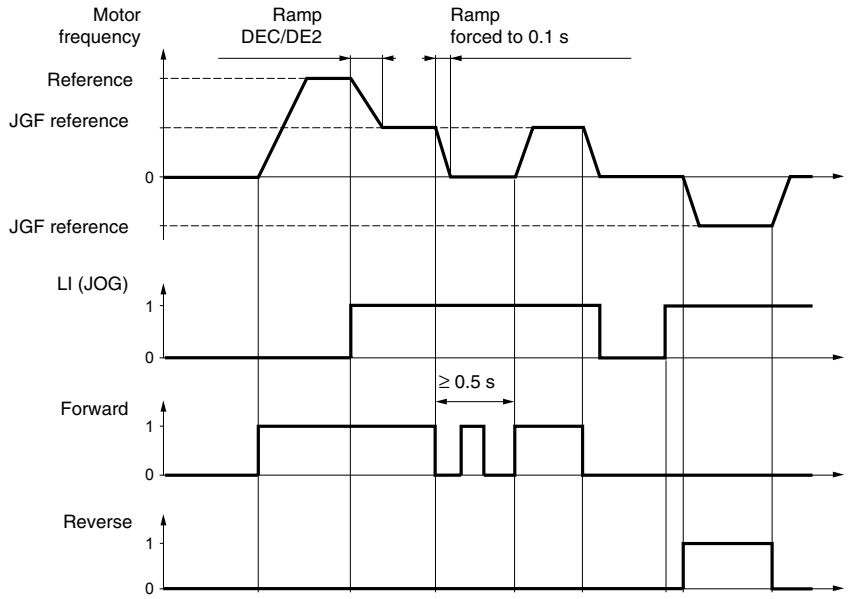 | | |
| | JGF | Jog operation reference [1] | 0 to 10 Hz | 10 Hz |



[1] Can also be accessed in the Settings menu, SEt-. See page 23.


© 2004 Schneider Electric All Rights Reserved

ENGLISH

## +/- Speed

This function can only be accessed if LAC = L2 or L3 (see page 44). The following sections describe two types of +/- speed operation: use of single action buttons and use of double action buttons. A pendant station is an example application of both.

### Single Action Buttons

Single action buttons require two logic inputs and two directions of rotation. The input assigned to the + speed command increases the speed, the input assigned to the - speed command decreases the speed.

| | **- speed** | **speed maintained** | **+ speed** |
|---|---|---|---|
| **Forward direction** | a and d | a | a and b |
| **Reverse direction** | c and d | c | c and b |

Example of wiring:

LI1: forward
LIx: reverse
LIy: + speed (USP)
LIz: - speed (DSP)

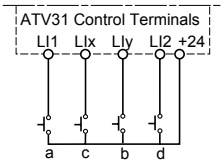


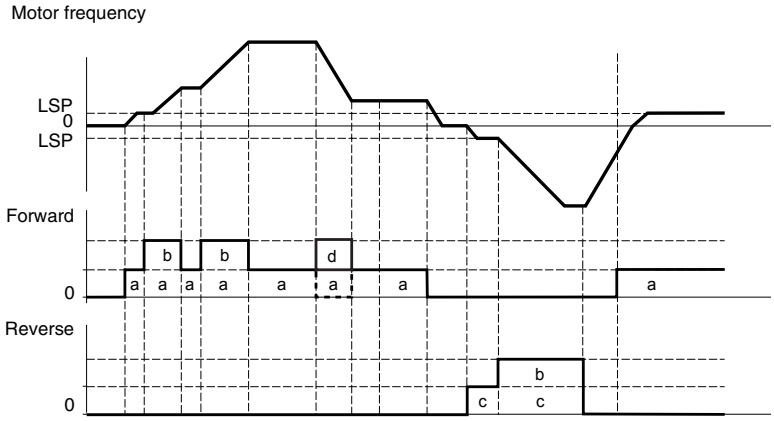


The maximum speed is set by HSP (see page 24).

*NOTE: If the reference is switched via rFC (see page 45) from any reference channel to another with +/- speed, the value of reference rFr (after ramp) is copied at the same time. This prevents the speed from being incorrectly reset to zero when switching takes place.*

© 2004 Schneider Electric All Rights Reserved

ENGLISH

Double Action Buttons

Only one logic input, assigned to + speed, is required for double action buttons. Double action buttons typically have two detents. Press the button to the first detent to maintain speed; press it to the second detent to increase speed. Each action closes a contact. Refer to the following table.

| | Released (- speed) | Press to 1st detent (speed maintained) | Press to 2nd detent (+ speed) |
|---|---|---|---|
| **Forward direction** | – | a | a and b |
| **Reverse direction** | – | c | c and d |

Example of wiring:

LI1: forward
LIx: reverse
LIy: + speed (USP)

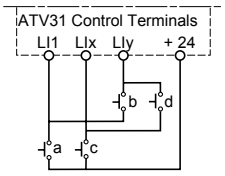


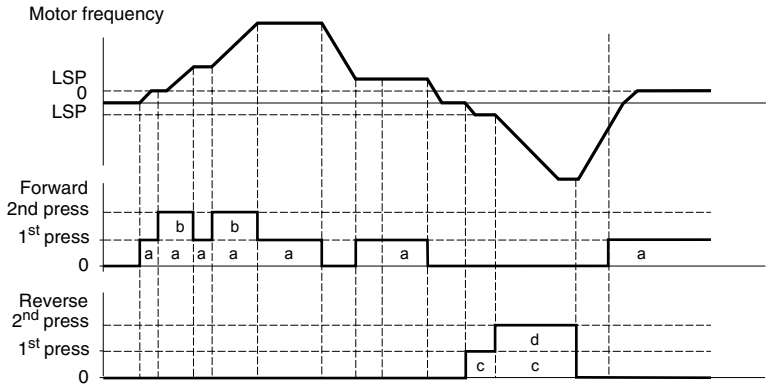


Use of double action buttons is incompatible with 3-wire control.

The maximum speed is set by HSP (see page 24).

*NOTE: If the reference is switched via rFC (see page 45) from any reference channel to another with +/- speed, the value of reference rFr (after ramp) is copied at the same time. This prevents the speed from being incorrectly reset to zero when switching takes place.*


© 2004 Schneider Electric All Rights Reserved

ENGLISH

| Sub-menu | Parameter | Description | Adjustment Range | Factory Setting |
|---|---|---|---|---|
| UPd- | | +/- Speed (motorized potentiometer)<br>This function can only be accessed if LAC = L2 or L3 and UPdH or UPdt is active (see page 44). | | |
| | USP | + Speed<br>Can only be accessed if UPdt is active. | See below. | nO |
| | | Selecting the assigned logic input activates the function.<br>nO: Not assigned<br>LI1: Logic input LI1<br>LI2: Logic input LI2<br>LI3: Logic input LI3<br>LI4: Logic input LI4<br>LI5: Logic input LI5<br>LI6: Logic input LI6 | | |
| | dSP | - Speed<br>Can only be accessed if UPdt is active. | See below. | nO |
| | | Selecting the assigned logic input activates the function.<br>nO: Not assigned<br>LI1: Logic input LI1<br>LI2: Logic input LI2<br>LI3: Logic input LI3<br>LI4: Logic input LI4<br>LI5: Logic input LI5<br>LI6: Logic input LI6 | | |
| | Str | Save reference | See below. | nO |
| | | Associated with the +/- speed function, this parameter can be used to save the reference:<br>When the run commands are removed, the reference is saved to RAM.<br>When the mains supply or the run commands are removed, the reference is saved to EEPROM.<br>On the next start-up, the speed reference is the last reference saved.<br>nO: No save<br>rAM: Save to RAM<br>EEP: Save to EEPROM | | |

These parameters only appear if the function has been enabled.

© 2004 Schneider Electric All Rights Reserved

ENGLISH

## PI Regulator

PI regulator provides regulation of a process using feedback from a sensor that sends a signal to the drive controller. This function is often used for pump and fan applications. The PI regulator function is activated by assigning an analog input to PI regulator feedback (PIF).

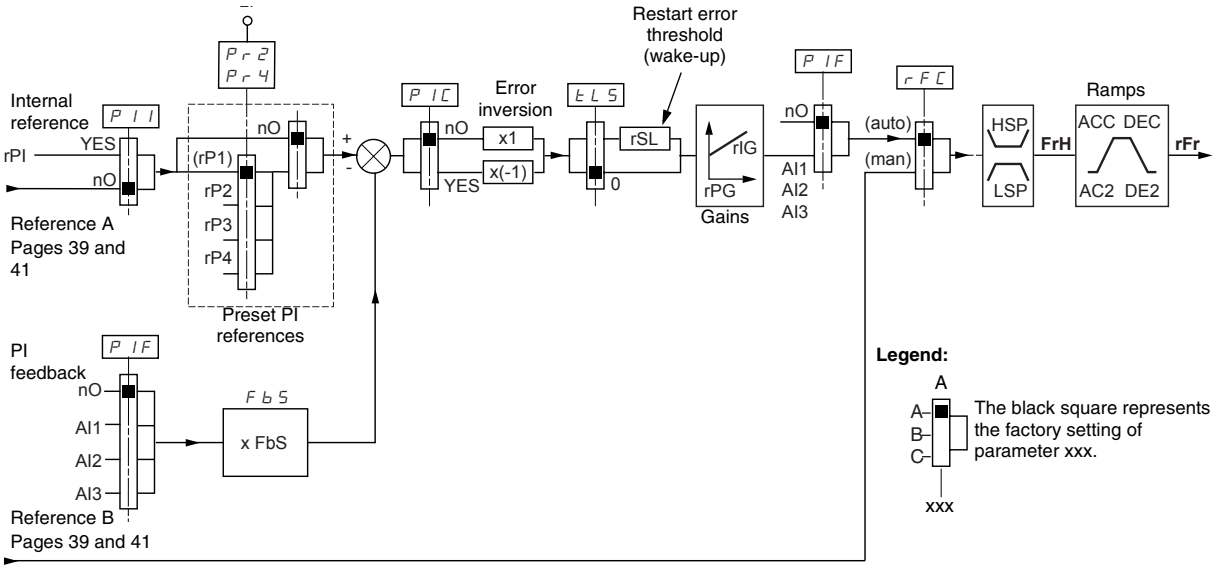


The **PI regulator feedback** parameter (PIF, see page 66) must be assigned to one of the analog inputs (AI1, AI2, or AI3).

The **PI reference** can be assigned to the following parameters, in order of priority:

- Preset references via logic inputs (rP2, rP3, and rP4, see page 66)
- Internal reference (rPI, see page 67)
- Reference Fr1 (see page 44)

Refer to the following table for combining logic inputs for preset PI references.

| LI (Pr4) | LI (Pr2) | Pr2 = nO | Reference |
|---|---|---|---|
| | | | rPI or Fr1 |
| 0 | 0 | | rPI or Fr1 |
| 0 | 1 | | rP2 |
| 1 | 0 | | rP3 |
| 1 | 1 | | rP4 |

The following parameters can also be accessed in the Settings menu (SEt-, beginning on page 23):

- Internal reference (rPI)
- Preset references (rP2, rP3, rP4)
- Regulator proportional gain (rPG)
- Regulator integral gain (rIG)
- PI feedback multiplication coefficient (FbS):

  The FbS parameter can be used to scale the reference to the variation range of the PI feedback (sensor range).

  For example, Pressure control:
  PI reference (process) = 0 to 5 bar = 0 to 100%
  Range of pressure sensor = 0 to 10 bar
  FbS = Maximum sensor scale / Maximum process
  FbS = 10 / 5 = 2


© 2004 Schneider Electric All Rights Reserved

- rSL parameter:

  Can be used to set the PI error threshold above which the PI regulator is reactivated (wake-up) after a stop due to the maximum time of operation at low speed being exceeded (tLS).

- Reversal of the direction of correction (PIC):

  If PIC = nO, the speed of the motor increases when the error is positive. An example application is pressure control with a compressor.

  If PIC = YES, the speed of the motor decreases when the error is positive. An example application is temperature control with a cooling fan.

© 2004 Schneider Electric All Rights Reserved

ENGLISH

## Manual–Automatic Operation with PI Regulator

This function combines PI regulator and switching of reference rFC (page 45). The speed reference is given by Fr2 or by the PI function, depending on the state of the logic input.

Setting up the PI Regulator

1. Configure the drive controller for PI regulator. See the diagram on page 62.
2. Perform a test with the factory configuration. In most cases, the factory settings are sufficient. To optimize the drive controller, gradually adjust rPG or rIG independently and observe the effect on PI feedback in relation to the reference.
3. If the factory settings are unstable or the reference is incorrect, perform a test with a speed reference in manual mode (without PI regulator) and with the drive controller on load for the speed range of the system:
   — In steady state, the speed must remain stable at the reference, and the PI feedback signal must be stable.
   — In transient state, the speed must follow the ramp then stabilize quickly, and the PI feedback must follow the speed.

   If this is not the case, check the drive controller settings and the sensor signal and cabling.
4. Enable PI regulator.
5. Set brA to nO (no auto-adaptation of the ramp).
6. Set the speed ramps (ACC, dEC) to the minimum permitted by the application without triggering an ObF fault.
7. Set the integral gain (rIG) to the minimum value.
8. Observe the PI feedback and the reference.
9. Perform several RUN/STOP cycles, or vary the load or reference rapidly.
10. Set the proportional gain (rPG) to obtain the ideal compromise between response time and stability in transient phases (slight overshoot and 1 to 2 oscillations before stabilizing).
11. If the reference varies from the preset value in steady state, gradually increase the integral gain (rIG) and reduce the proportional gain (rPG) in the event of instability (pump applications) to find a compromise between response time and static precision. Refer to the figure on page 62.
12. Perform in-production tests throughout the reference range.


© 2004 Schneider Electric All Rights Reserved

ENGLISH

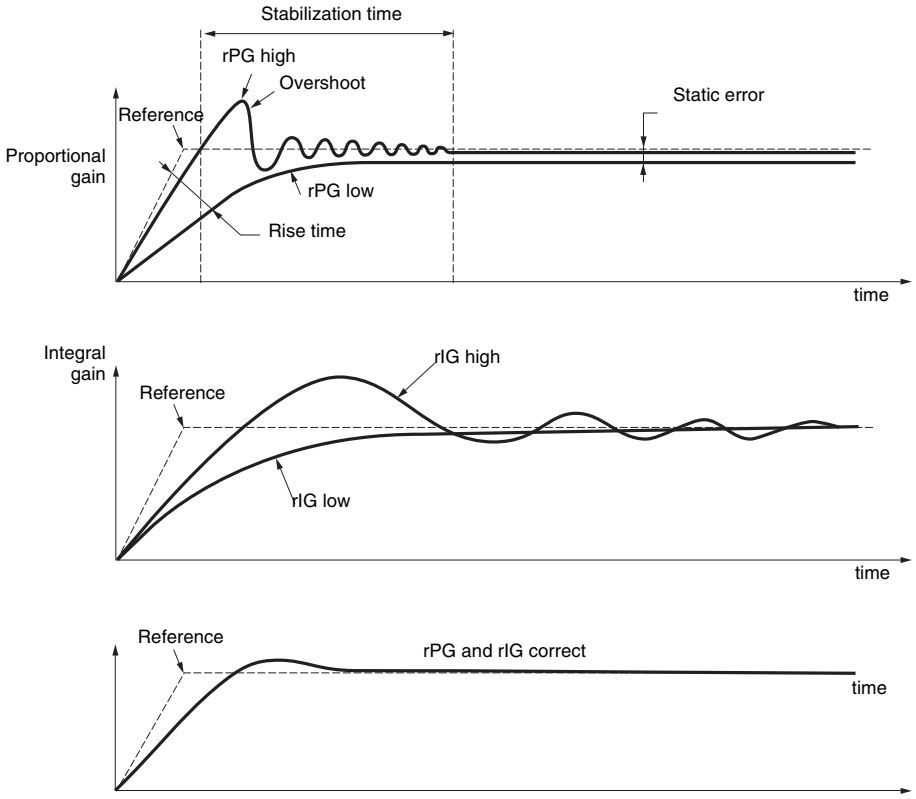


The oscillation frequency depends on the application.

| Parameter | Rise Time | Overshoot | Stabilization Time | Static Error |
|---|---|---|---|---|
| **rPG** ↗ | ↘↘ | ↗ | = | ↘ |
| **rIG** ↗ | ↘ | ↗↗ | ↗ | ↘↘ |

© 2004 Schneider Electric All Rights Reserved

ENGLISH

| Sub-menu | Parameter | Description | Adjustment Range | Factory Setting |
|---|---|---|---|---|
| PI- | | PI regulator | | |
| | PIF | PI regulator feedback | See below. | nO |
| | | nO: Not assigned<br>AI1: Analog input AI1<br>AI2: Analog input AI2<br>AI3: Analog input AI3 | | |
| | rPG | PI regulator proportional gain [1] | 0.01 to 100 | 1 |
| | | Contributes to dynamic performance during rapid changes in the PI feedback. | | |
| | rIG | PI regulator integral gain [1] | 0.01 to 100 | 1 |
| | | Contributes to static precision during slow changes in the PI feedback. | | |
| | FbS | PI feedback multiplication coefficient [1] | 0.1 to 100 | 1 |
| | | For process adaptation | | |
| | PIC | Reversal of the PI regulator direction of correction [1] | See below. | nO |
| | | nO: normal<br>YES: reverse | | |
| | Pr2 | 2 preset PI references | See below. | nO |
| | | Selecting the assigned logic input activates the function.<br>nO: Not assigned<br>LI1: Logic input LI1<br>LI2: Logic input LI2<br>LI3: Logic input LI3<br>LI4: Logic input LI4<br>LI5: Logic input LI5<br>LI6: Logic input LI6<br>If LAC = L3, the following assignments are possible:<br>Cd11: Bit 11 of the Modbus or CANopen control word<br>Cd12: Bit 12 of the Modbus or CANopen control word<br>Cd13: Bit 13 of the Modbus or CANopen control word<br>Cd14: Bit 14 of the Modbus or CANopen control word<br>Cd15: Bit 15 of the Modbus or CANopen control word | | |
| | Pr4 | 4 preset PI references | See below. | nO |
| | | Selecting the assigned logic input activates the function.<br>*NOTE: Ensure that Pr2 has been assigned before assigning Pr4.*<br>nO: Not assigned<br>LI1: Logic input LI1<br>LI2: Logic input LI2<br>LI3: Logic input LI3<br>LI4: Logic input LI4<br>LI5: Logic input LI5<br>LI6: Logic input LI6<br>If LAC = L3, the following assignments are possible:<br>Cd11: Bit 11 of the Modbus or CANopen control word<br>Cd12: Bit 12 of the Modbus or CANopen control word<br>Cd13: Bit 13 of the Modbus or CANopen control word<br>Cd14: Bit 14 of the Modbus or CANopen control word<br>Cd15: Bit 15 of the Modbus or CANopen control word | | |
| | rP2 | 2nd preset PI reference [1] | 0 to 100% | 30% |
| | | Only appears if Pr2 has been enabled by selecting an input. | | |
| | rP3 | 3rd preset PI reference [1] | 0 to 100% | 60% |
| | | Only appears if Pr4 has been enabled by selecting an input. | | |
| | rP4 | 4th preset PI reference [1] | 0 to 100% | 90% |
| | | Only appears if Pr4 has been enabled by selecting an input. | | |

[1] Can also be accessed in the Settings menu, SEt-. See page 23.

These parameters only appear if the function has been enabled.


© 2004 Schneider Electric All Rights Reserved

ENGLISH

| Sub-menu | Parameter | Description | Adjustment Range | Factory Setting |
|---|---|---|---|---|
| PI- (continued) | rSL | Restart after error threshold (wake-up threshold) | 0 to 100% | 0 |
| | | If the PI and low speed operating time (tLS, see page 26) functions are configured for the same time, the PI regulator may attempt to set a speed lower than LSP. This results in unsatisfactory operation which consists of a cycle of starting, operating at low speed, then stopping.<br>Parameter rSL (restart error threshold) can be used to set a minimum PI error threshold for restarting after a stop at prolonged LSP.<br>The function is inactive if tLS = 0. | | |
| | PII | Internal PI regulator reference | | nO |
| | | nO: The PI regulator reference is Fr1, except for UPdH and UPdt (+/- speed cannot be used as the PI regulator reference).<br>YES: The PI regulator reference is parameter rPI. | | |
| | rPI | Internal PI regulator reference [1] | 0 to 100% | 0 |

[1] Can also be accessed in the Settings menu, SEt-. See page 23.

These parameters only appear if the function has been enabled.

© 2004 Schneider Electric All Rights Reserved

ENGLISH

## Brake Control

Brake control enables the drive controller to manage an electromagnetic brake. This function can only be accessed if LAC = L2 or L3 (page 40). It can be assigned to relay R2 or to logic output AOC.

To prevent jolts, synchronize the brake release with torque build-up during startup, and synchronize the brake engage with zero speed on stopping. Refer to the following figure for braking sequence.

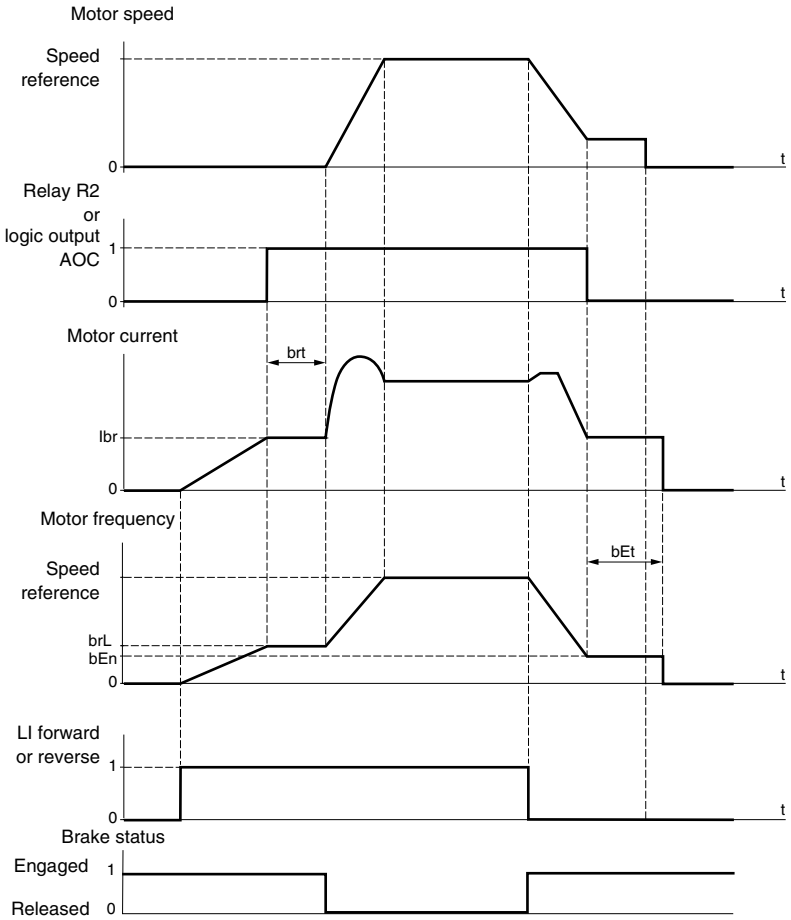


The following parameters can be accessed in the FUn- menu (see page 70):

- Brake release frequency (brL)
- Brake release current (Ibr)
- Brake release time (brt)
- Brake engage frequency (bEn)
- Brake engage time (bEt)
- Brake release pulse (bIP)


© 2004 Schneider Electric All Rights Reserved

ENGLISH

The following are the recommended settings for brake control:

1. Brake release frequency (brL):
   — Horizontal movement: Set to 0.
   — Vertical movement: Set to the nominal slip of the motor in Hz.
2. Brake release current (Ibr):
   — Horizontal movement: Set to 0.
   — Vertical movement: Set to the nominal current of the motor at first, then adjust the release current to prevent jolting on start-up. Ensure that the maximum load is held when the brake is released.
3. Brake release time (brt):
   — Adjust according to the type of brake. Brake release time is the time required for the mechanical brake to release.
4. Brake engage frequency (bEn):
   — Set to twice the nominal slip of the motor, then adjust according to the result.

   *NOTE:* The maximum value of bEn is LSP. Ensure that LSP is set to a sufficient value.
5. Brake engage time (bEt):
   — Adjust according to the type of brake. This is the time required for the mechanical brake to engage.
6. Brake release pulse (bIP):
   — Horizontal movement: Set to nO.
   — Vertical movement: Set to YES and ensure that the motor torque direction for forward control corresponds to the upward direction of the load. If necessary, reverse two motor phases. This parameter generates motor torque in an upward direction, regardless of the direction of operation, to maintain the load while the brake is releasing.

© 2004 Schneider Electric All Rights Reserved

ENGLISH

| Sub-menu | Parameter | Description | Adjustment Range | Factory Setting |
|---|---|---|---|---|
| bLC- | | Brake control<br>This function can only be accessed if LAC = L2 or L3 (page 40). | | |
| | bLC | Brake control configuration | See below. | nO |
| | | nO: Not assigned<br>r2: Relay R2<br>dO: Logic output AOC<br>If bLC is assigned, parameter FLr (page 78) and brA (page 50) are forced to nO, and parameter OPL (page 78) is forced to YES. | | |
| | brL | Brake release frequency | 0.0 to 10.0 Hz | Varies with drive controller rating |
| | Ibr | Motor current threshold for brake release | 0 to 1.36 In [1] | Varies with drive controller rating |
| | brt | Brake release time | 0 to 5 s | 0.5 s |
| | LSP | Low speed | 0 to HSP (page 24) | 0 Hz |
| | | Motor frequency at minimum reference. This parameter can also be modified in the SEt- menu (page 24). | | |
| | bEn | Brake engage frequency threshold | nO, 0 to LSP Hz | nO |
| | | nO: Not set<br>If bLC is assigned and bEn = nO, the drive controller will trip on bLF fault at start-up. | | |
| | bEt | Brake engage time | 0 to 5 s | 0.5 s |
| | bIP | Brake release pulse | See below. | nO |
| | | nO: While the brake is releasing, the motor torque direction corresponds to the commanded direction of rotation.<br>YES: While the brake is releasing, the motor torque direction is always forward, regardless of the commanded direction of rotation.<br>Ensure that the motor torque direction for Forward control corresponds to the upward direction of the load. If necessary, reverse two motor phases. | | |

[1] In corresponds to the nominal drive current indicated in the *ATV31 Installation Manual* and on the drive controller nameplate.

These parameters only appear if the function has been enabled.


© 2004 Schneider Electric All Rights Reserved

ENGLISH

| Sub-menu | Parameter | Description | Adjustment Range | Factory Setting |
|---|---|---|---|---|
| LC2- | | Switching for second current limit<br>This function can only be accessed if LAC = L2 or L3 (page 40). | | |
| | LC2 | Switching for second current limit | See below. | nO |
| | | Selecting the assigned logic input activates the function.<br>nO: Not assigned<br>LI1: Logic input LI1<br>LI2: Logic input LI2<br>LI3: Logic input LI3<br>LI4: Logic input LI4<br>LI5: Logic input LI5<br>LI6: Logic input LI6<br><br>If LAC = L3, the following assignments are possible:<br>Cd11: Bit 11 of the Modbus or CANopen control word<br>Cd12: Bit 12 of the Modbus or CANopen control word<br>Cd13: Bit 13 of the Modbus or CANopen control word<br>Cd14: Bit 14 of the Modbus or CANopen control word<br>Cd15: Bit 15 of the Modbus or CANopen control word<br><br>CL1 is enabled when the logic input or control word bit is in state 0 (SEt- menu page 26).<br>CL2 is enabled when the logic input or control word bit is in state 1. | | |
| | CL2 | 2nd current limit [1] | 0.25 to 1.5 In [2] | 1.5 In [2] |

[1] Can also be accessed in the Settings menu, SEt-. See page 23.

[2] In corresponds to the nominal drive current indicated in the *ATV31 Installation Manual* and on the drive controller nameplate.

These parameters only appear if the function has been enabled.

© 2004 Schneider Electric All Rights Reserved

ENGLISH

| Sub-menu | Parameter | Description | Adjustment Range | Factory Setting |
|---|---|---|---|---|
| CHP- | | Motor switching<br>This function can only be accessed if LAC = L2 or L3 (page 40). | | |
| | CHP | Switching, motor 2 | See below. | nO |
| | | nO: Not assigned<br>LI1: Logic input LI1<br>LI2: Logic input LI2<br>LI3: Logic input LI3<br>LI4: Logic input LI4<br>LI5: Logic input LI5<br>LI6: Logic input LI6<br>If LAC = L3, the following assignments are possible:<br>Cd11: Bit 11 of the Modbus or CANopen control word<br>Cd12: Bit 12 of the Modbus or CANopen control word<br>Cd13: Bit 13 of the Modbus or CANopen control word<br>Cd14: Bit 14 of the Modbus or CANopen control word<br>Cd15: Bit 15 of the Modbus or CANopen control word<br>LI or bit = 0: Motor 1<br>LI or bit = 1: Motor 2<br>• The motor switching function disables motor thermal protection. An external means of motor thermal protection must be provided. See the caution message on page 14.<br>• If you use this function, do not use the tUn auto-tuning function (page 29) on motor 2 and do not configure tUn to rUn or POn.<br>• Changes to parameters do not take effect until the drive controller is stopped. | | |
| | UnS2 | Nominal motor voltage (motor 2) given on the nameplate | Varies with drive controller rating | Varies with drive controller rating |
| | | ATV31•••M2: 100 to 240 V<br>ATV31•••M3X: 100 to 240 V<br>ATV31•••N4: 100 to 500 V<br>ATV31•••S6X:100 to 600 V | | |
| | FrS2 | Nominal motor frequency (motor 2) given on the nameplate | 10 to 500 Hz | 50 Hz |
| | | The ratio $\frac{\text{UnS (in V)}}{\text{FrS (in Hz)}}$ must not exceed the following values<br>ATV31•••M2: 7 max.<br>ATV31•••M3X: 7 max<br>ATV31•••N4: 14 max.<br>ATV31•••S6X: 17 max.<br>Changing the setting of bFr to 60 Hz also changes the setting of FrS2 to 60 Hz. | | |
| | nCr2 | Nominal motor current (motor 2) given on the nameplate | 0.25 to 1.5 In [1] | Varies with drive controller rating |
| | nSP2 | Nominal motor speed (motor 2) given on the nameplate | 0 to 32760 RPM | Varies with drive controller rating |
| | | 0 to 9999 rpm, then 10.00 to 32.76 krpm<br>If the nameplate indicates synchronous speed and slip (in Hz or as a percentage) instead of nominal speed, calculate nominal speed as follows:<br>Nominal speed = Synchronous speed x $\frac{100 - \text{slip as a\%}}{100}$<br>or<br>Nominal speed = Synchronous speed x $\frac{50 - \text{slip in Hz}}{50}$ (50 Hz motors)<br>or<br>Nominal speed = Synchronous speed x $\frac{60 - \text{slip in Hz}}{60}$ (60 Hz motors) | | |

[1] In corresponds to the nominal drive current indicated in the *ATV31 Installation Manual* and on the drive controller nameplate.

These parameters only appear if the function has been enabled.


© 2004 Schneider Electric All Rights Reserved

ENGLISH

| Sub-menu | Parameter | Description | Adjustment Range | Factory Setting |
|---|---|---|---|---|
| CHP- (continued) | COS2 | Motor power factor (motor 2) given on the nameplate | 0.5 to 1 | Varies with drive controller rating |
| | UFt2 | Selection of the type of voltage/frequency ratio (motor 2) | See below. | n |
| | | L : Constant torque (for motors connected in parallel or special motors)<br>P: Variable torque (pump and fan applications)<br>n: Sensorless flux vector control (for constant torque applications)<br>nLd: Energy savings (for variable torque applications not requiring high dynamics. This behaves in a similar way to the P ratio at no load and the n ratio at load).<br> 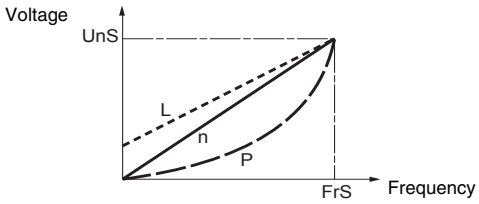 <br> | | |
| | UFr2 | IR compensation/Voltage boost (motor 2) [1] | 0 to 100% | 20 |
| | | For UFt2 = n or nLd: IR compensation. For UFt2 = L or P: Voltage boost.<br>Used to optimize the torque at low speed. Increase UFr2 if the torque is insufficient. To avoid operating instability, ensure that the value of UFr2 is not too high for a warm motor. Modifying UFt2 causes UFr2 to return to the factory setting (20%). | | |
| | FLG2 | Frequency loop gain (motor 2) [1] | 1 to 100% | 20 |
| | | FLG2 can only be accessed if UFt2 = n or nLd (see page 73).This parameter adjusts the speed ramp based on the inertia of the driven load.<br>If the value is too low, the response time is longer.<br>If the value is too high, overspeed or operating instability can result.<br>FLG2 low<br> 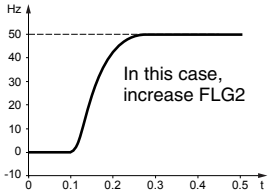 <br><br>FLG2 correct<br> 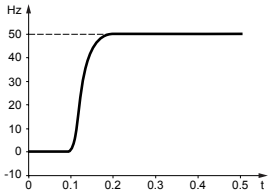 <br><br>FLG2 high<br> 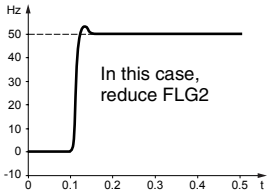 <br> | | |
| | StA2 | Frequency loop stability (motor 2) [1] | 1 to 100% | 20 |
| | | StA2 can only be accessed if UFt2 = n or nLd (see page 73).<br>This parameter adapts the return to steady state after a speed transient (acceleration or deceleration) according to the dynamics of the driven machine.<br>Gradually increase the stability to avoid any overspeed.<br>If the value is too low, overspeed or operating instability can result.<br>If the value is too high, the response time is longer.<br>StA2 low<br> 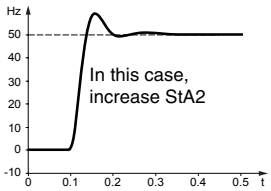 <br><br>StA2 correct<br> 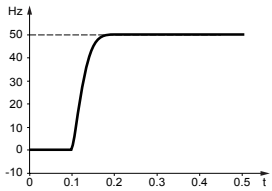 <br><br>StA2 high<br> 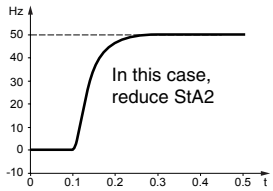 <br> | | |
| | SLP2 | Slip compensation (motor 2) [1] | 0 to 150% | 100 |
| | | SLP2 can only be accessed if UFt2 = n or nLd (see page 73).<br>This parameter adjusts the slip compensation value fixed by nominal motor speed.<br>If the slip setting < actual slip, the motor is not rotating at the correct speed in steady state.<br>If the slip setting > actual slip, the motor is overcompensated and the speed is unstable. | | |

[1] Can also be accessed in the Settings menu, SEt-. See page 23.

These parameters only appear if the function has been enabled.

© 2004 Schneider Electric All Rights Reserved

ENGLISH

## Management of Limit Switches

This function can be used to manage the operation of one or two limit switches, in 1 or 2 directions of operation. It can only be accessed if LAC = L2 or L3 (see page 40). To use the function:

- Assign one or two logic inputs to forward limit and reverse limit.
- Select the type of stop (on ramp, fast, or freewheel stop). After a stop, the motor is permitted to restart in the opposite direction only.
- The stop is performed when the input is in state 0. The direction of operation is authorized in state 1.

| Sub-menu | Parameter | Description | Adjustment Range | Factory Setting |
|---|---|---|---|---|
| LSt- | | Management of limit switches<br>LSt- can only be accessed if LAC = L2 or L3 (page 40). | | |
| | LAF | Limit, forward direction | See below. | nO |
| | | nO: Not assigned<br>LI1: Logic input LI1<br>LI2: Logic input LI2<br>LI3: Logic input LI3<br>LI4: Logic input LI4<br>LI5: Logic input LI5<br>LI6: Logic input LI6 | | |
| | LAr | Limit, reverse direction | See below. | nO |
| | | nO: Not assigned<br>LI1: Logic input LI1<br>LI2: Logic input LI2<br>LI3: Logic input LI3<br>LI4: Logic input LI4<br>LI5: Logic input LI5<br>LI6: Logic input LI6 | | |
| | LAS | Type of limit switch stop | See below. | nSt |
| | | rP: On ramp<br>FSt: Fast stop<br>nSt: Freewheel stop | | |

These parameters only appear if the function has been enabled.


© 2004 Schneider Electric All Rights Reserved

ENGLISH

| Sub-menu | Parameter | Description | Adjustment Range | Factory Setting |
|---|---|---|---|---|
| SCS | | Saving the configuration [1] | See below. | nO |
| | | nO: Function inactive<br>Str1: Saves the current configuration (but not the result of auto-tuning) to EEPROM. SCS automatically switches to nO as soon as the save is performed. Use this function to keep another configuration in reserve, in addition to the current configuration.<br>The drive controller is factory set with the current configuration and the backup configuration both initialized to the factory configuration.<br>If the remote keypad display is connected to the drive controller, up to four additional settings are available: FIL1, FIL2, FIL3, and FIL4. Use these selections to save up to four configurations in the remote keypad display's EEPROM memory.<br>SCS automatically switches to nO as soon as the save is performed. | | |
| FCS | | Return to factory setting/restore configuration [1] | See below. | nO |
| | | nO: Function inactive<br>rECI: Replaces the current configuration with the backup configuration previously saved by SCS (SCS set to Strl). rECI is visible only if the backup configuration has been saved. FCS automatically changes to nO as soon as this action is performed.<br>In1: Replaces the current configuration with the factory settings. FCS automatically switches to nO as soon as this action is performed.<br>If the remote keypad display is connected to the drive controller, up to four additional selections are available corresponding to backup files loaded in the remote keypad display's EEPROM memory: FIL1, FIL2, FIL3, and FIL4. These selections replace the current configuration with the corresponding backup configuration in the remote keypad display. FCS automatically changes to nO as soon as this action is performed.<br>Note: If nAd briefly appears on the display once the parameter has switched to nO, the configuration transfer is not possible and has not been performed (because the controller ratings are different, for example). If nEr briefly appears on the display once the parameter has switched to nO, a configuration transfer error has occurred and the factory settings must be restored using InI. In both cases, check the configuration to be transferred before trying again.<br>*NOTE: For rECI, InI, and FIL1 to FIL4 to take effect, you must press and hold down the ENT key for 2 s.* | | |

[1] SCS and FCS can be accessed via several configuration menus but they concern all menus and parameters as a whole.

© 2004 Schneider Electric All Rights Reserved

ENGLISH

## FAULT MENU FLT-

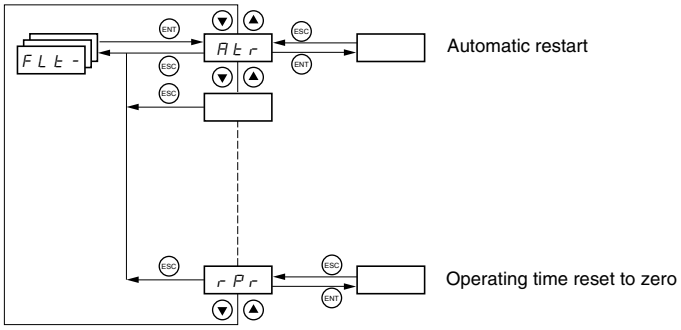


Fault Menu parameters can only be modified when the drive is stopped and no run command is present.

On the optional remote keypad display, this menu can be accessed with the switch in the position.


© 2004 Schneider Electric All Rights Reserved

ENGLISH

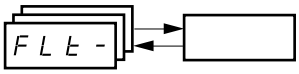


| Code | Description | Factory Setting |
|---|---|---|
| Atr | Automatic restart | nO |
| | nO: Function inactive<br>YES: Automatic restart after locking on a fault, if the cause of the fault is not longer present and the other operating conditions permit the restart. The restart is performed by a series of automatic attempts separated by increasingly longer waiting periods: 1 s, 5 s, 10 s, then once per minute for the period defined by tAr.<br>If the restart has not taken place once the maximum duration of restart time, tAr, has elapsed, the procedure is aborted and the drive controller remains locked until power is cycled.<br>The following faults permit automatic restart:<br>External fault (EPF)<br>Loss of 4-20 mA reference (LFF)<br>CANopen fault (COF)<br>System overvoltage (OSF)<br>Loss of a line phase (PHF)<br>Loss of a motor phase (OPF)<br>DC bus overvoltage (ObF)<br>Motor overload (OLF)<br>Serial link (SLF)<br>Drive overheating (OHF)<br>This function requires 2-wire control (tCC = 2C) with tCt = LEL or PFO (page 31).<br>Ensure that an automatic restart will not endanger personnel or equipment in any way. Refer to the Warning message below. | |
| tAr | Maximum duration of restart process | 5 minutes |
| | 5: 5 minutes<br>10: 10 minutes<br>30: 30 minutes<br>1h: 1 hour<br>2h: 2 hours<br>3h: 3 hours<br>Ct: Unlimited<br>This parameter appears if Atr = YES. It can be used to limit the number of consecutive restarts on a recurrent fault. | |
| rSF | Reset fault | no |
| | nO: Not assigned<br>LI1: Logic input LI1<br>LI2: Logic input LI2<br>LI3: Logic input LI3<br>LI4: Logic input LI4<br>LI5: Logic input LI5<br>LI6: Logic input LI6 | |

These parameters only appear if the function has been enabled.

## ⚠ WARNING

**UNINTENDED EQUIPMENT OPERATION**

- Automatic Restart can only be used for machines or installations that present no danger in the event of automatic restarting, either for personnel or equipment.
- If Automatic Restart is active, R1 will only indicate a fault after the restart sequence has timed out.
- Equipment operation must conform to national and local safety regulations.

**Failure to follow these instructions can result in death, serious injury, or equipment damage.**

© 2004 Schneider Electric All Rights Reserved

ENGLISH

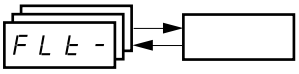


| Code | Description | Factory Setting |
|---|---|---|
| FLr | Catch on the fly (automatically catch a spinning load on ramp) | nO |
| | Enables a smooth restart of a spinning load if the run command is maintained after the following events:<br>• Loss of line supply or disconnection<br>• Fault reset or automatic restart. See the warning on page 77.<br>• Freewheel stop<br>The speed given by the drive controller resumes from the estimated speed of the motor at the time of the restart, then follows the ramp to the reference speed.<br>This function requires 2-wire control (tCC = 2C) with tCt = LEL or PFO.<br>nO: Function inactive<br>YES: Function active<br>When the function is enabled, it activates at each run command, resulting in a slight delay (1 second maximum) before start.<br>FLr is forced to nO if brake control (bLC) is assigned (page 70). | |
| EtF | External fault | nO |
| | nO: Not assigned<br>LI1: Logic input LI1<br>LI2: Logic input LI2<br>LI3: Logic input LI3<br>LI4: Logic input LI4<br>LI5: Logic input LI5<br>LI6: Logic input LI6<br>If LAC = L3, the following assignments are possible:<br>Cd11: Bit 11 of the Modbus or CANopen control word<br>Cd12: Bit 12 of the Modbus or CANopen control word<br>Cd13: Bit 13 of the Modbus or CANopen control word<br>Cd14: Bit 14 of the Modbus or CANopen control word<br>Cd15: Bit 15 of the Modbus or CANopen control word | |
| EPL | Stop mode in the event of an external fault (EtF) | YES |
| | nO: Fault ignored<br>YES: Fault with a freewheel stop<br>rMP: Fault with a stop on the ramp<br>FSt: Fault with a fast stop | |
| OPL | Configuration of motor phase loss fault | YES |
| | nO: Function inactive<br>YES: Triggering of OPF fault<br>OAC: No fault is triggered, but output voltage is monitored to avoid an overcurrent when the link with the motor is re-established and a catch on the fly occurs, even if FLr = nO. To be used with a downstream contactor.<br>OPL is forced to YES if brake control (bLC) is assigned (page 70). | |
| IPL | Configuration of line phase loss fault | YES |
| | This parameter is only accessible on three-phase drives.<br>nO: Fault ignored<br>YES: Fault with fast stop | |
| OHL | Stop mode in the event of a drive overheating fault (OHF) | YES |
| | nO: Fault ignored<br>YES: Fault with a freewheel stop<br>rMP: Fault with a stop on the ramp<br>FSt: Fault with a fast stop | |
| OLL | Stop mode in the event of a motor overload fault (OLF) | YES |
| | nO: Fault ignored<br>YES: Fault with a freewheel stop<br>rMP: Fault with a stop on the ramp<br>FSt: Fault with a fast stop | |


© 2004 Schneider Electric All Rights Reserved

ENGLISH

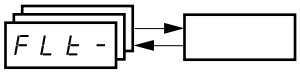


| Code | Description | Adjustment Range | Factory Setting |
|---|---|---|---|
| SLL | Stop mode in the event of a Modbus serial link fault (SLF) | See below. | YES |
| | nO: Fault ignored<br>YES: Fault with a freewheel stop<br>rMP: Fault with a stop on the ramp<br>FSt: Fault with a fast stop | | |
| COL | Stop mode in the event of a CANopen serial link fault (COF) | See below. | YES |
| | nO: Fault ignored<br>YES: Fault with a freewheel stop<br>rMP: Fault with a stop on the ramp<br>FSt: Fault with a fast stop | | |
| tnL | Configuration of auto-tuning fault (tnF) | See below. | YES |
| | nO: Fault ignored (the drive controller reverts to the factory settings)<br>YES: Fault with drive controller locked | | |
| LFL | Stop mode in the event of a loss of 4 - 20 mA signal fault (LFF) | See below. | nO |
| | nO: Fault ignored (only value possible if CrL3 ≤3 mA, see page 32)<br>YES: Fault with a freewheel stop<br>LFF: The drive controller switches to the fallback speed (see LFF parameter below)<br>rLS: The drive controller maintains the speed at which it was running when the fault occurred until the fault is no longer present.<br>rMP: Fault with a stop on the ramp<br>FSt: Fault with a fast stop<br>Before setting LFL to YES, rMP, or FSt, check the connection of input AI3. Otherwise, the drive controller may immediately switch to an LFF fault. | | |
| LFF | Fallback speed | 0 to 500 Hz | 10 Hz |
| | Fallback speed setting for stopping in the event of a fault | | |
| drn | Derated operation in the event of an undervoltage | See below. | nO |
| | nO: Function inactive<br>YES: The line voltage monitoring threshold is:<br>ATV31•••M2: 130 V<br>ATV31•••M3X: 130 V<br>ATV31•••N4: 270 V<br>ATV31•••S6X: 340 V<br>In this case, a line choke must be used and the performance of the drive controller cannot be guaranteed.<br>In order to assign this function, you must press and hold down the ENT key for 2 seconds. | | |
| StP | Controlled stop on loss of mains power | See below. | nO |
| | nO: Lock the drive controller and stop the motor on a freewheel<br>MMS: Use the inertia to maintain the drive controller power supply as long as possible<br>rMP: Stop on the active ramp (dEC or dE2)<br>FSt: Fast stop. The stopping time depends on the inertia and the braking ability of the drive controller. | | |
| InH | Fault inhibit | See below. | nO |
| | **CAUTION**<br>**LOSS OF FAULT PROTECTION**<br>Inhibiting faults may damage the drive controller beyond repair by preventing shutdown upon occurrence of a fault.<br>**Failure to follow this precaution can result in equipment damage.** | | |
| | nO: Not assigned<br>LI1: Logic input LI1<br>LI2: Logic input LI2<br>LI3: Logic input LI3<br>LI4: Logic input LI4<br>LI5: Logic input LI5<br>LI6: Logic input LI6<br>Fault monitoring is active when the input is in state 0. It is inactive when the input is in state 1.<br>All active faults are reset when the input state changes from 1 to 0.<br>*NOTE: To assign this function, you must press and hold down the ENT key for 2 seconds.* | | |
| rPr | Operating time reset to zero | See below. | nO |
| | nO: No<br>rtH: Operating time reset to zero<br>The rPr parameter is automatically set to nO as soon as the reset to zero is performed. | | |

© 2004 Schneider Electric All Rights Reserved

ENGLISH

## COMMUNICATION MENU COM-

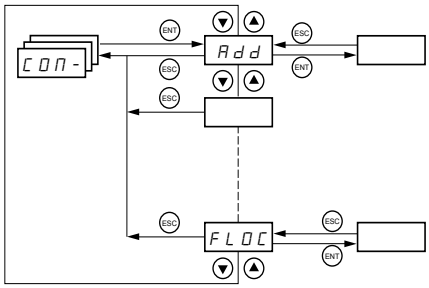


The Communication menu parameters can only be modified when the drive controller is stopped and no run command is present. Modifications to parameters Add, tbr, tFO, AdCO, and bdCO take effect only after a restart.

On the optional remote keypad display, this menu can be accessed with the switch in the position.

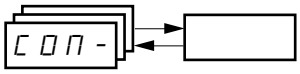


| Code | Description | Adjustment Range | Factory Setting |
|---|---|---|---|
| Add | Modbus: Drive address | 1 to 247 | 1 |
| tbr | Modbus: Transmission speed | | 19200 bps |
| | 4.8: 4800 bps<br>9.6: 9600 bps<br>19.2: 19200 bps<br>*NOTE: The remote keypad display can only be used with the transmission speed set to 19200 bps.* | | |
| tFO | Modbus communication format | See below. | 8E1 |
| | 8O1: 8 data bits, odd parity, 1 stop bit<br>8E1: 8 data bits, even parity, 1 stop bit<br>8n1: 8 data bits, no parity, 1 stop bit<br>8n2: 8 data bits, no parity, 2 stop bits<br>*NOTE: The remote keypad display can only be used with the communication format set to 8 data bits, even parity, 1 stop bit.* | | |
| tto | Modbus: Time-out | 0.1 to 10 s | 10 s |
| AdCO | CANopen: Drive address | 0 to 127 | 0 |
| bdCO | CANopen: Transmission speed | See below. | 125 |
| | 10.0: 10 kbps<br>20.0: 20 kbps<br>50.0: 50 kbps<br>125.0: 125 kbps<br>250.0: 250 kbps<br>500.0: 500 kbps<br>1000: 1000 kbps | | |
| ErCO | CANopen: Error registry (read-only) | See below. | |
| | 0: No error<br>1: Bus off error<br>2: Life time error<br>3: CAN overrun<br>4: Heartbeat error | | |
| FLO | Forced local mode | See below. | nO |
| | nO: Not assigned<br>LI1: Logic input LI1<br>LI2: Logic input LI2<br>LI3: Logic input LI3<br>LI4: Logic input LI4<br>LI5: Logic input LI5<br>LI6: Logic input LI6<br>In forced local mode, the terminal block and drive keypad display regain control of the drive controller. | | |


© 2004 Schneider Electric All Rights Reserved

ENGLISH

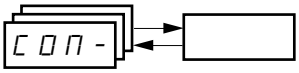


| Code | Description | Adjustment Range | Factory Setting |
|---|---|---|---|
| FLOC | Selection of the reference and control channel in forced local mode<br>Can only be accessed if LAC = 3 | See below. | AI1<br>AIP for ATV31••••••A |
| | In forced local mode, only the speed reference is taken into account. PI functions, summing inputs, etc. are not active.<br>Refer to the diagrams on pages 40 to 43.<br>AI1: Analog input AI1, logic inputs LI<br>AI2: Analog input AI2, logic inputs LI<br>AI3: Analog input AI3, logic inputs LI<br>AIP: Potentiometer (ATV31••••••A controllers only), RUN/STOP buttons<br>LCC: Remote keypad display: LFr reference (page 24), RUN/STOP/FWD/REV buttons | | |

These parameters only appear if the function has been enabled.

© 2004 Schneider Electric All Rights Reserved

ENGLISH

## DISPLAY MENU SUP-

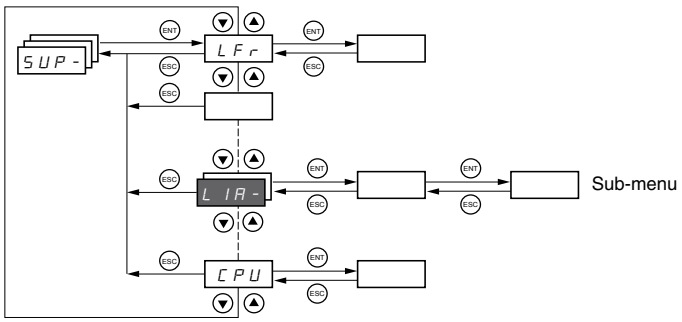


The display menu parameters can be accessed with the drive controller running or stopped. This menu can be accessed with the access locking switch on the remote keypad display in any position.

Some functions have numerous parameters. To simplify programming and to keep parameter lists short, these functions have been grouped in sub-menus. Like menus, sub-menus are identified by a dash after their code. For example, LIA- is a submenu.

When the drive controller is running, the value of one of the display parameters is shown. To change the parameter displayed, scroll to the desired display parameter and press the ENT key. To retain your selection as the new default, press and hold the ENT key again for 2 seconds. The value of this parameter will be displayed during operation, even after power to the drive controller has been cycled. If the new choice is not confirmed by pressing the ENT key a second time, the drive controller will return to the previous parameter after power is cycled.


© 2004 Schneider Electric All Rights Reserved

ENGLISH

| Code | Description | Adjustment Range |
|---|---|---|
| LFr | Frequency reference for control via the drive controller keypad or the remote keypad display | 0 to 500 Hz |
| rPI | Internal PI reference | 0 to 100% |
| FrH | Frequency reference before ramp (absolute value) | 0 to 500 Hz |
| rFr | Output frequency applied to the motor | - 500 Hz to + 500 Hz |
| SPd1 or SPd2 or SPd3 | Output value in customer units<br>SPd1, SPd2, or SPd3 depending on the SdS parameter, see page 27. Factory setting is SPd3. | |
| LCr | Motor current | |
| OPr | Motor power | |
| | 100% = Nominal motor power, calculated using the parameters entered in the drC- menu. | |
| ULn | Line voltage (Vac) calculated from the measured voltage on the DC bus | |
| tHr | Motor thermal state | |
| | 100% = Nominal thermal state<br>118% = OLF threshold (motor overload) | |
| tHd | Drive thermal state | |
| | 100% = Nominal thermal state<br>118% = OHF threshold (drive overheating) | |
| LFt | Last fault | |
| | bLF: Brake control fault<br>CFF: Configuration (parameters) incorrect<br>CFI: Configuration (parameters) invalid<br>COF: Communication fault line 2 (CANopen)<br>CrF: Capacitor pre-charge fault<br>EEF: EEPROM memory fault<br>EPF: External fault<br>InF: Internal fault<br>LFF: 4 - 20 mA fault on AI3<br>nOF: No fault saved<br>ObF: DC bus overvoltage fault<br>OCF: Overcurrent fault<br>OHF: Drive overheating fault<br>OLF: Motor overload fault<br>OPF: Motor phase loss fault<br>OSF: Line supply overvoltage fault<br>PHF: Line supply phase loss fault<br>SCF: Motor short-circuit fault (phase, earth)<br>SLF: Modbus communication fault<br>SOF: Motor overspeed fault<br>tnF: Auto-tuning fault<br>USF: Line supply undervoltage fault | |
| Otr | Motor torque | |
| | 100% = Nominal motor torque, calculated using the parameters entered in the drC- menu. | |
| rtH | Operating time | 0 to 65530 hours |
| | Total time the motor has been powered up:<br>0 to 9999 (hours), then 10.00 to 65.53 (khours).<br>Can be reset to zero by the rPr parameter in the FLt- menu (see page 79). | |

These parameters only appear if the function has been enabled.

© 2004 Schneider Electric All Rights Reserved

ENGLISH

| Code | | Description |
|---|---|---|
| | COd | Terminal locking code<br>Allows the drive configuration to be protected with an access locking code.<br>*NOTE: Before entering a code, be sure to record it.*<br>OFF: No access locking code<br>• **To lock the access**, use the ▲ key to enter a code (2 to 9999) and press ENT. “ON” appears on the screen to indicate that the parameters have been locked.<br>On: A code (2 to 9999) is locking the access to the drive controller<br>• **To unlock the access**, use the ▲ key to enter the access code (2 to 9999) and press ENT. The code remains on the display and the access is unlocked until the next time the power is removed from the controller. Parameter access will be locked again the next time power is reapplied.<br>• **If an incorrect code is entered**, the display changes to “ON” and the parameters remain locked.<br>XXXX: Parameter access is unlocked (the code remains on the screen).<br>• **To reactivate locking with the same code** when the parameters have been unlocked, return to ON. using the ▼ button then press ENT. “ON” appears on the screen to indicate that the parameters have been locked.<br>• **To lock the access with a new code** when the parameters have been unlocked, enter a new code (increment the display using ▲ or ▼ ) and press ENT. “ON” appears on the screen to indicate that the parameters have been locked.<br>• **To clear locking** when the parameters have been unlocked, return to OFF using the ▼ button and press ENT. “OFF” remains on the screen. The parameters are unlocked and will remain unlocked.<br>When the access is locked using a code, only the display parameters are accessible, with only a temporary choice of the parameter displayed. |
| | tUS | Auto-tuning status. See page 29.<br>tAb: The default stator resistance value is used to control the motor.<br>PEnd: Auto-tuning has been requested, but not yet performed.<br>PrOG: Auto-tuning in progress.<br>FAIL: Auto-tuning has failed.<br>dOnE: Auto-tuning is complete. The stator resistance measured by the auto-tuning function is used to control the motor.<br>Strd: Auto-tuning is complete. The cold stator resistance (rSC other than nO) is used to control the motor. |
| | UdP | Indicates the ATV31 firmware version.<br>For example, 1102 = V1.1 IE02. |
| LIA- | | Logic input functions |
| | LI1A<br>LI2A<br>LI3A<br>LI4A<br>LI5A<br>LI6A | Can be used to display the functions assigned to each input. If no functions are assigned, nO is displayed. Use ▲ and ▼ to scroll through the functions. If a number of functions have been assigned to the same input, ensure that they are compatible. |
| | LIS | Can be used to display the state of the logic inputs (using the segments of the display: high = 1, low = 0)<br>State 1<br>State 0<br>LI1 LI2 LI3 LI4 LI5 LI6<br>Example above: LI1 and LI6 are at 1, LI2–LI5 are at 0. |
| AIA- | | Analog input functions |
| | AI1A<br>AI2A<br>AI3A | Can be used to display the functions assigned to each input. If no functions have been assigned, nO is displayed. Use ▲ and ▼ to scroll through the functions. If a number of functions are assigned to the same input, ensure that they are compatible. |


© 2004 Schneider Electric All Rights Reserved

ENGLISH

# SECTION 4: MAINTENANCE AND TROUBLESHOOTING

## PRECAUTIONS

Read the following safety statements before proceeding with any maintenance or troubleshooting procedures.

**⚠ DANGER**

**HAZARDOUS VOLTAGE**

- Disconnect all power before servicing the drive controller.
- Read and understand these procedure and the precaution on page 15 of this manual before servicing the ATV31 drive controllers.
- Installation, adjustment, and maintenance of these drive controllers must be performed by qualified personnel.

**Failure to follow this instruction will result in death or serious injury.**

## ROUTINE MAINTENANCE

Perform the following steps at regular intervals:

- Check the condition and tightness of the connections.
- Make sure that the ventilation is effective and that the temperature around the drive controller remains at an acceptable level.
- Remove dust and debris from the drive controller, if necessary.

## FAULT DISPLAY

If a problem arises during setup or operation, ensure that all ambient environment, mounting, and connection recommendations have been followed.

The first fault detected is stored and displayed, flashing, on the screen. The drive controller locks and the fault relay (RA-RC) contact opens, if it has been configured for this function.

### Drive Controller Does Not Start, No Fault Displayed

If the drive controller will not start and there is no display indication, consider the following:

1. Check the power supply to the drive controller.
2. The assignment of the fast stop or freewheel stop functions prevents the drive controller from starting if the corresponding logic inputs are not powered up. In this case, the drive controller displays nSt in freewheel stop mode and FSt in fast mode. This is normal, since these functions are active at zero speed so that the drive controller will stop safely if there is a wire break.
3. Ensure that the run command inputs have been actuated in accordance with the chosen control mode (tCC parameter in the I-O- menu. See page 31).
4. If an input is assigned to the limit switch function and this input is at state 0, the drive controller can only be started by sending a command for the opposite direction (see page 74).
5. If the reference channel (page 39) or the control channel (page 40) is assigned to Modbus or CANopen, the drive controller displays nSt on power up and remains stopped until the communication bus sends a command.

© 2004 Schneider Electric All Rights Reserved

ENGLISH

## Clearing Faults

The drive controller can be unlocked after a fault by the following methods:

- Removing power from the drive controller until the display clears.
- Automatically, if the automatic restart function is enabled (parameter Atr is set to Yes, see page 77)
- By a logic input, if a logic input is assigned to the fault reset function (parameter rSF assigned to LI•, see page 77)

## Faults Which Cannot Be Automatically Reset

Faults which cannot be automatically reset are listed in the table below. To clear these faults:

1. Remove power from the drive controller.
2. Wait for the display to go off completely.
3. Determine the cause of the fault and correct it.
4. Reapply power.

bLF, CrF, OCF, SOF, and tnF can also be reset remotely via a logic input. Refer to the rSF parameter on page 77.

| Fault | Probable Cause | Remedy |
|---|---|---|
| bLF<br>Brake sequence | Brake release current not reached | • Check the drive controller and motor connections.<br>• Check the motor windings.<br>• Check the Ibr setting in the FUn- menu. Refer to page 70. |
| CrF<br>Precharge circuit fault | Precharge circuit damaged | • Reset the drive controller.<br>• Replace the drive controller. |
| InF<br>Internal fault | • Internal fault<br>• Internal connection fault | • Remove sources of electromagnetic interference.<br>• Replace the drive controller. |
| OCF<br>Overcurrent | • Incorrect parameter settings in the SEt- and drC- menus<br>• Acceleration too rapid<br>• Drive controller and/or motor undersized for load<br>• Mechanical blockage | • Check the SEt- and drC- parameters.<br>• Ensure that the size of the motor and drive controller is sufficient for the load.<br>• Clear the mechanical blockage. |
| SCF<br>Motor short circuit | • Short circuit or grounding at the drive controller output<br>• Significant ground leakage current at the drive controller output if several motors are connected in parallel | • Check the cables connecting the drive controller to the motor, and check the motor insulation.<br>• Reduce the switching frequency.<br>• Connect output filters in series with the motor. |
| SOF<br>Overspeed | • Instability<br>• Overhauling load | • Check the motor, gain, and stability parameters.<br>• Add a braking resistor.<br>• Check the size of the motor, drive controller, and load. |
| tnF<br>Auto-tuning fault | • Motor or motor power not suitable for the drive controller<br>• Motor not connected to the drive controller | • Use the L or the P ratio (see UFt on page 29).<br>• Check the presence of the motor during auto-tuning.<br>• If a downstream contactor is being used, close it during auto-tuning. |


© 2004 Schneider Electric All Rights Reserved

ENGLISH

## Faults Which Can Be Automatically Reset

After the cause of the fault has been removed, the faults in the table below can be reset:

- With the automatic restart function. Refer to the Atr parameter in the FLt-menu on page 77.
- Via a logic input. Refer to the rSF parameter in the FLt- menu on page 77.
- By cycling power to the drive controller.

| Fault | Probable Cause | Remedy |
|---|---|---|
| COF<br>Serial link failure CANopen | Loss of communication between the drive controller and communication device or remote keypad. | • Check the communication bus.<br>• Refer to the product-specific documentation. |
| EPF<br>External fault | User defined | User defined |
| LFF<br>Loss of 4-20 mA follower | Loss of the 4-20 mA reference on input AI3 | Check the connection on input AI3. |
| ObF<br>Overvoltage during deceleration | • Braking too rapidly<br>• Overhauling load | • Increase the deceleration time.<br>• Install a braking resistor if necessary.<br>• Activate the brA function if it is compatible with the application. Refer to page 50. |
| OHF<br>Drive overload | • Drive controller or ambient temperature are too high.<br>• Continuous motor current load is too high. | Check the motor load, the drive controller ventilation, and the environment. Wait for the drive controller to cool before restarting. |
| OLF<br>Motor overload | • Thermal trip due to prolonged motor overload<br>• Motor power rating too low for the application | Check the ItH setting (motor thermal protection, page 24), check the motor load. Allow the motor to cool before restarting. |
| OPF<br>Motor phase failure | • Loss of phase at drive controller output<br>• Downstream contactor open<br>• Motor not connected<br>• Instability in the motor current<br>• Drive controller oversized for motor | • Check the connections from the drive controller to the motor.<br>• If a downstream contactor is being used, set OPL to OAC. Refer to page 78.<br>• Test the drive controller on a low power motor or without a motor: set OPL to nO. Refer to page 78.<br>• Check and optimize the UFr (page 25), UnS (page 28), and nCr (page 28) parameters and perform auto-tuning (page 29). |
| OSF<br>Overvoltage during steady state operation or during acceleration | • Line voltage too high<br>• Line supply transients | • Check the line voltage. Compare with the drive controller nameplate rating.<br>• Reset the drive controller. |
| PHF<br>Input phase failure | • Input phase loss, blown fuse<br>• Three-phase drive controller used on a single phase line supply<br>• Input phase imbalance<br>• Transient phase fault<br>*NOTE: This protection only operates with the drive controller running under load.* | • Check the connections and the fuses.<br>• Disable the fault by setting IPL to nO. Refer to page 78.<br>• Verify that the input power is correct.<br>• Supply three-phase power if needed. |
| SLF<br>Serial link failure Modbus | Loss of connection between the drive controller and the communication device or the remote keypad display. | • Check the communication connection.<br>• Refer to the product-specific documentation. |

© 2004 Schneider Electric All Rights Reserved

ENGLISH

## Faults That Reset When the Fault Is Cleared

| Fault | Probable Cause | Remedy |
|---|---|---|
| CFF<br>Configuration fault | The parameter configurations are not suited to the application. | Restore the factory settings or load the backup configuration, if it is valid. See parameter FCS in the drC- menu, page 33. |
| CFI<br>Configuration fault via serial link | The parameter configurations loaded in the drive controller via the serial link are not suited to the application. | • Check the configuration loaded previously.<br>• Load a compatible configuration. |
| USF<br>Undervoltage | • Line supply too low<br>• Transient voltage dip<br>• Damaged precharge resistor | • Check the line voltage.<br>• Check the setting of the UNS parameter. See page 28.<br>• Replace the drive controller. |

## CONFIGURATION SETTINGS TABLES

Use the configuration settings tables beginning on page 89 to prepare and record the configuration before programming the drive controller. It is always possible to **return to the factory settings** by setting the FCS parameter to Init in the drC-, I-O-, CtL-, or FUn- menus. See pages 30, 33, 47, or 75.


© 2004 Schneider Electric All Rights Reserved

ENGLISH

## Drive Controller and Customer ID

Drive Controller ATV31.....

Customer ID no. (if applicable).....

## 1st level Adjustment Parameter

bFr

| Code | Factory Setting | Custom Setting |
|---|---|---|
| bFr | 50 | |

## Settings menu

SEt -

| Code | Factory Setting | Custom Setting |
|---|---|---|
| ACC | 3 s | s |
| AC2 | 5 s | s |
| dE2 | 5 s | s |
| dEC | 3 s | s |
| tA1 | 10% | % |
| tA2 | 10% | % |
| tA3 | 10% | % |
| tA4 | 10% | % |
| LSP | 0 Hz | Hz |
| HSP | bFr | Hz |
| ItH | According to drive rating | A |
| UFr | 20% | % |
| FLG | 20% | % |
| StA | 20% | % |
| SLP | 100 Hz | % |
| IdC | 0.7 In (1) | A |
| tdC | 0.5 s | s |
| tdC1 | 0.5 s | s |
| SdC1 | 0.7 In (1) | A |
| tdC2 | 0 s | s |
| SdC2 | 0.5 In (1) | A |
| JPF | 0 Hz | Hz |
| JF2 | 0 Hz | Hz |
| JGF | 10 Hz | Hz |
| rPG | 1 | |
| rIG | 1 / s | / s |
| FbS | 1 | |
| PIC | nO | |

| Code | Factory Setting | Custom Setting |
|---|---|---|
| rP2 | 30% | % |
| rP3 | 60% | % |
| rP4 | 90% | % |
| SP2 | 10 Hz | Hz |
| SP3 | 15 Hz | Hz |
| SP4 | 20 Hz | Hz |
| SP5 | 25 Hz | Hz |
| SP6 | 30 Hz | Hz |
| SP7 | 35 Hz | Hz |
| SP8 | 40 Hz | Hz |
| SP9 | 45 Hz | Hz |
| SP10 | 50 Hz | Hz |
| SP11 | 55 HZ | Hz |
| SP12 | 60 Hz | Hz |
| SP13 | 70 Hz | Hz |
| SP14 | 80 Hz | Hz |
| SP15 | 90 Hz | Hz |
| SP16 | 100 Hz | Hz |
| CL1 | 1.5 In [1] | A |
| CL2 | 1.5 In [1] | A |
| tLS | 0 (no time limit) | s |
| rSL | 0 | |
| UFr2 | 20% | % |
| FLG2 | 20% | % |
| StA2 | 20% | % |
| SLP2 | 100% | % |
| Ftd | bFr | Hz |
| ttd | 100% | % |
| Ctd | In [1] | A |
| SdS | 30 | |
| SFr | 4 kHz | kHz |

[1] In corresponds to the nominal drive current indicated in the *ATV31 Installation Manual* and on the drive controller nameplate.

These parameters only appear if the corresponding function is enabled.
The majority can also be accessed and adjusted in the function configuration menu.
Those which are underlined appear in factory settings mode.

© 2004 Schneider Electric All Rights Reserved

ENGLISH

## Drive Control Menu

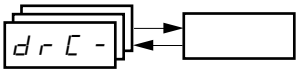


| Code | Factory Setting | Custom Setting |
|---|---|---|
| bFr | 50 Hz | Hz |
| UnS | Varies with drive rating | V |
| FrS | 50 Hz | Hz |
| nCr | Varies with drive rating | A |
| nSP | Varies with drive rating | RPM |
| COS | Varies with drive rating | |
| rSC | nO | |

| Code | Factory Setting | Custom Setting |
|---|---|---|
| tUS | tAb | |
| UFt | n | |
| nrd | YES | |
| SFr | 4 kHz | kHz |
| tFr | 60 Hz | Hz |
| SSL | nO | |

## I/O Menu

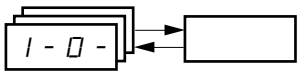


| Code | Factory Setting | Custom Setting |
|---|---|---|
| tCC | 2C<br>ATV31••••••A: LOC | |
| tCt | trn | |
| rrS | if tCC = 2C, LI2<br>if tCC = 3C, LI3<br>if tCC = LOC: nO | |
| CrL3 | 4 mA | mA |
| CrH3 | 20 mA | mA |

| Code | Factory Setting | Custom Setting |
|---|---|---|
| AOIt | 0A | |
| dO | nO | |
| r1 | FLt | |
| r2 | nO | |

## Control Menu

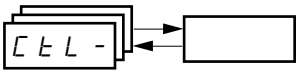


| Code | Factory Setting | Custom Setting |
|---|---|---|
| LAC | L1 | |
| Fr1 | AI1<br>AIP for ATV31••••••A | |
| Fr2 | nO | |
| rFC | Fr1 | |
| CHCF | SIM | |
| Cd1 | tEr<br>LOC for ATV31••••••A | |

| Code | Factory Setting | Custom Setting |
|---|---|---|
| Cd2 | Mdb | |
| CCS | Cd1 | |
| COP | nO | |
| LCC | nO | |
| PSt | YES | |
| rOt | dFr | |

These parameters only appear if the corresponding function is enabled.


© 2004 Schneider Electric All Rights Reserved

ENGLISH

## Application Functions Menu

| Code | | Factory Setting | Custom Setting |
|---|---|---|---|
| rPC- | rPt | LIn | |
| | tA1 | 10% | % |
| | tA2 | 10% | % |
| | tA3 | 10% | % |
| | tA4 | 10% | % |
| | ACC | 3 s | s |
| | dEC | 3 s | s |
| | rPS | nO | |
| | Frt | 0 | Hz |
| | AC2 | 5 s | s |
| | dE2 | 5 s | s |
| | brA | YES | |
| StC- | Stt | Stn | |
| | FSt | nO | |
| | dCF | 4 | |
| | dCI | nO | |
| | IdC | 0.7 In | A |
| | tdC | 0.5 s | s |
| | nSt | nO | |
| AdC- | AdC | YES | |
| | tdC1 | 0.5 s | s |
| | SdC1 | 0.7 In [1] | A |
| | tdC2 | 0 s | s |
| | SdC2 | 0.5 In [1] | A |
| SAI- | SA2 | AI2 | |
| | SA3 | nO | |

| Code | | Factory Setting | Custom Setting |
|---|---|---|---|
| JOG- | JOG | If tCC = 2C: nO<br>If tCC = 3C: LI4<br>If tCC = LOC: nO | |
| | JGF | 10 Hz | Hz |
| UPd- | USP | nO | |
| | dSP | nO | |
| | Str | nO | |
| PI- | PIF | nO | |
| | rPG | 1 | |
| | rIG | 1 | |
| | FbS | 1 | |
| | PIC | nO | |
| | Pr2 | nO | |
| | Pr4 | nO | |
| | rP2 | 30% | % |
| | rP3 | 60% | % |
| | rP4 | 90% | % |
| | rSL | 0 | |
| | PII | nO | |
| | rPI | 0% | % |
| bLC- | bLC | nO | |
| | brL | Varies with drive controller rating | Hz |
| | Ibr | | A |
| | brt | 0.5 s | s |
| | bEn | nO | Hz |
| | bEt | 0.5 s | s |
| | bIP | nO | |
| LC2- | LC2 | nO | |
| | CL2 | 1.5 In [1] | A |

[1] In corresponds to the nominal drive current indicated in the *ATV31 Installation Manual* and on the drive controller nameplate.

These parameters only appear if the corresponding function is enabled. They can also be accessed in the SEt- menu.

© 2004 Schneider Electric All Rights Reserved

ENGLISH

## Application Functions Menu (Continued)

| Code | | Factory Setting | Custom Setting |
|---|---|---|---|
| PSS- | PS2 | If tCC = 2C: LI3<br>If tCC = 3C: LI4<br>If tCC = LOC: LI3 | |
| | PS4 | If tCC = 2C: LI4<br>If tCC = 3C: nO<br>If tCC = LOC: LI4 | |
| | PS8 | nO | |
| | PS16 | nO | |
| | SP2 | 10 Hz | Hz |
| | SP3 | 15 Hz | Hz |
| | SP4 | 20 Hz | Hz |
| | SP5 | 25 Hz | Hz |
| | SP6 | 30 Hz | Hz |
| | SP7 | 35 Hz | Hz |
| | SP8 | 40 Hz | Hz |
| | SP9 | 45 Hz | Hz |
| | SP10 | 50 Hz | Hz |
| | SP11 | 55 Hz | Hz |
| | SP12 | 60 Hz | Hz |
| | SP13 | 70 Hz | Hz |
| | SP14 | 80 Hz | Hz |
| | SP15 | 90 Hz | Hz |
| | SP16 | 100 Hz | Hz |

| Code | | Factory Setting | Custom Setting |
|---|---|---|---|
| CHP- | CHP | nO | |
| | UnS2 | Varies with drive controller rating | V |
| | FrS2 | 50 Hz | Hz |
| | nCr2 | Varies with drive controller rating | A |
| | nSP2 | | RPM |
| | COS2 | | |
| | UFt2 | n | |
| | UFr2 | 20% | % |
| | FLG2 | 20% | % |
| | StA2 | 20% | % |
| | SLP2 | 100 Hz | Hz |
| LSt- | LAF | nO | |
| | LAr | nO | |
| | LAS | nSt | |
| | | | |

These parameters only appear if the corresponding function is enabled. They can also be accessed in the SEt- menu.


© 2004 Schneider Electric All Rights Reserved

ENGLISH

## Fault Menu

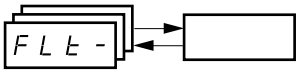


| Code | Factory Setting | Custom Setting |
|---|---|---|
| Atr | nO | |
| tAr | 5 | |
| rSF | nO | |
| FLr | nO | |
| EtF | nO | |
| EPL | YES | |
| OPL | YES | |
| IPL | YES | |
| OHL | YES | |
| OLL | YES | |

| Code | Factory Setting | Custom Setting |
|---|---|---|
| SLL | YES | |
| COL | YES | |
| tnL | YES | |
| LFL | nO | |
| LFF | 10 Hz | Hz |
| drn | nO | |
| StP | nO | |
| InH | nO | |
| rPr | nO | |

These parameters only appear if the corresponding function is enabled.

## Communication Menu

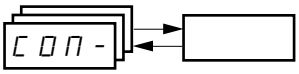


| Code | Factory Setting | Custom Setting |
|---|---|---|
| Add | 1 | |
| tbr | 19200 | |
| tFO | 8E1 | |
| ttO | 10 s | s |
| AdCO | 0 | |

| Code | Factory Setting | Custom Setting |
|---|---|---|
| bdCO | 125 | |
| FLO | nO | |
| FLOC | AI1<br>AIP for ATV31••••••A | |

© 2004 Schneider Electric All Rights Reserved

ENGLISH

## INDEX OF PARAMETER CODES

| Code | See Page: |
|---|---|
| AC2 | 24 |
| ACC | 24 |
| AdC | 53 |
| AdC0 | 80 |
| Add | 80 |
| AI1A | 84 |
| AI2A | 84 |
| AI3A | 84 |
| AOIt | 84 |
| Atr | 77 |
| bdC0 | 80 |
| bEn | 70 |
| bEt | 70 |
| bFr | 28 |
| bIP | 70 |
| bLC | 70 |
| brA | 50 |
| brL | 70 |
| brt | 70 |
| CCS | 46 |
| Cd1 | 45 |
| Cd2 | 45 |
| CHCF | 45 |
| CHP | 72 |
| CL2 | 71 |
| CL1 | 26 |
| COd | 84 |
| COP | 46 |
| COS | 28 |
| COS2 | 73 |
| CrH3 | 32 |
| CrL3 | 32 |
| Ctd | 27 |
| dCF | 51 |
| dC1 | 51 |
| dE2 | 50 |
| dEC | 50 |
| dO | 32 |
| drn | 79 |
| dSP | 61 |
| EPL | 78 |
| ErC0 | 80 |
| EtF | 78 |
| FbS | 26 |
| FCS | 30 |
| FLG | 25 |
| FLG2 | 26 |
| FL0 | 80 |
| FL0C | 81 |
| FLr | 78 |
| Fr1 | 44 |
| Fr2 | 44 |
| FrH | 83 |
| FrS | 28 |
| FrS2 | 72 |

| Code | See Page: |
|---|---|
| Frt | 50 |
| FSt | 51 |
| Ftd | 27 |
| HSP | 24 |
| Ibr | 70 |
| IdC | 51 |
| InH | 79 |
| IPL | 78 |
| ItH | 24 |
| JF2 | 26 |
| JGF | 26 |
| JOG | 58 |
| JPF | 26 |
| LAC | 44 |
| LAF | 74 |
| LAr | 74 |
| LAS | 74 |
| LC2 | 71 |
| LCC | 46 |
| LCr | 83 |
| LFF | 79 |
| LFL | 79 |
| LFr | 83 |
| LFt | 83 |
| LI1A | 84 |
| LI2A | 84 |
| LI3A | 84 |
| LI4A | 84 |
| LI5A | 84 |
| LI6A | 84 |
| LIS | 84 |
| LSP | 24 |
| nCr | 28 |
| nCr2 | 72 |
| nrd | 30 |
| nSP | 28 |
| nSP2 | 72 |
| nSt | 52 |
| OHL | 78 |
| OLL | 78 |
| OPL | 78 |
| OPr | 83 |
| Otr | 83 |
| PIC | 66 |
| PIF | 66 |
| Pr2 | 66 |
| Pr4 | 66 |
| PSI6 | 57 |
| PS2 | 56 |
| PS4 | 56 |
| PS8 | 56 |
| PSt | 47 |
| r1 | 32 |
| r2 | 32 |
| rFC | 45 |

| Code | See Page: |
|---|---|
| rFr | 83 |
| rIG | 66 |
| rOt | 47 |
| rP2 | 66 |
| rP3 | 66 |
| rP4 | 66 |
| rPG | 66 |
| rPI | 67 |
| rPI | 83 |
| rPr | 79 |
| rPS | 50 |
| rPt | 49 |
| rrS | 31 |
| rSC | 29 |
| rSF | 77 |
| rSL | 67 |
| rtH | 83 |
| SA2 | 54 |
| SA3 | 54 |
| SCS | 30 |
| SdC1 | 53 |
| SdC2 | 53 |
| SdS | 27 |
| SFr | 27 |
| SLL | 79 |
| SLP | 25 |
| SLP2 | 73 |
| SPI0 | 57 |
| SPI1 | 57 |
| SPI2 | 57 |
| SPI3 | 57 |
| SPI4 | 57 |
| SPI5 | 57 |
| SPI6 | 57 |
| SP2 | 57 |
| SP3 | 57 |
| SP4 | 57 |
| SP5 | 57 |
| SP6 | 57 |
| SP7 | 57 |
| SP8 | 57 |
| SP9 | 57 |
| SPd1 | 83 |
| SPd2 | 83 |
| SPd3 | 83 |
| SSL | 30 |
| StA | 25 |
| StA2 | 73 |
| StP | 79 |
| Str | 61 |
| Stt | 51 |
| tA1 | 24 |
| tA2 | 24 |
| tA3 | 24 |
| tA4 | 24 |

| Code | See Page: |
|---|---|
| tAr | 77 |
| tbr | 80 |
| tCC | 31 |
| tCt | 31 |
| tdC | 25 |
| tdC1 | 25 |
| tdC2 | 25 |
| tFr | 30 |
| tHd | 83 |
| tHr | 83 |
| tLS | 26 |
| ttd | 27 |
| ttO | 80 |
| tUn | 29 |
| tUS | 29 |
| tUS | 84 |
| UdP | 84 |
| UFr | 25 |
| UFr2 | 73 |
| UFt | 29 |
| UFt2 | 73 |
| ULn | 83 |
| UnS | 28 |
| UnS2 | 72 |
| USP | 61 |


© 2004 Schneider Electric All Rights Reserved

ENGLISH

## INDEX OF FUNCTIONS


| Function | See Page: |
|---|---|
| +/- speed | 59 |
| 2-wire/3-wire control | 31 |
| Analog/logic output AOC/AOV | 32 |
| Automatic restart | 77 |
| Automatic DC injection | 53 |
| Brake control | 68 |
| CANopen: Drive address | 80 |
| Catch on the fly (automatically catch a spinning load on ramp) | 78 |
| Control and reference channels | 34 |
| Control channel switching | 46 |
| Current limit | 26 |
| DC injection via logic input | 51 |
| Deceleration ramp adaptation | 50 |
| Drive thermal protection | 13 |
| Drive ventilation | 13 |
| Fast stop via logic input | 51 |
| Flying restart (automatic catching a spinning load on ramp) | 78 |
| Forced local mode | 80 |
| Freewheel stop via logic input | 52 |
| Function access level | 44 |
| Jog operation | 58 |
| Management of limit switch | 74 |
| Modbus: Drive address | 80 |
| Motor control auto-tuning | 29 |
| Motor switching | 72 |
| Motor thermal protection | 14 |
| Motor thermal protection - max. thermal current | 24 |
| PI regulator | 62 |
| Preset speeds | 55 |
| Ramp switching | 50 |
| Ramps | 49 |
| Reference switching | 45 |
| Relay R1 | 32 |
| Relay R2 | 32 |
| Reset of current fault | 77 |
| Return to factory settings/restore configuration | 30 |
| Saving the configuration | 30 |
| Selection of the type of voltage/frequency ratio | 29 |
| Skip frequency | 26 |
| Stop modes | 51 |
| Summing inputs | 54 |
| Switching for second current limit | 71 |
| Switching frequency | 27 |


© 2004 Schneider Electric All Rights Reserved

ENGLISH


© 2004 Schneider Electric All Rights Reserved