VVDED302026USR2/03
02/2003
Raleigh, NC, USA

Instruction Bulletin | Boletín de instrucciones | Directives d'utilisation

ALTIVAR® 11

Adjustable Speed Drive Controllers User's Guide

Variadores de velocidad ajustable Guía del usuario

Variateurs de vitesse Guide de l'utilisateur

Retain for Future Use.
Conservar para uso futuro.
À conserver pour usage ultérieur.

Telemecanique

SQUARE D

ALTIVAR® 11 Adjustable Speed Drive Controllers

User's Guide

ENGLISH

Variadores de velocidad ajustable ALTIVAR® 11

Guía del usuario

ESPAÑOL

Variateurs de vitesse ALTIVAR® 11

Guide de l'utilisateur

FRANÇAIS

© 2003 Schneider Electric All Rights Reserved

ENGLISH

⚠ DANGER

HAZARDOUS VOLTAGE

- Read and understand this manual before installing or operating the ALTIVAR 11 drive controllers. Installation, adjustment, repair, and maintenance must be performed by qualified personnel.
- The user is responsible for conforming to all applicable code requirements with respect to grounding all equipment.
- Many parts in this drive controller, including printed wiring boards, operate at line voltage. DO NOT TOUCH. Use only electrically insulated tools.
- DO NOT touch unshielded components or terminal strip screw connections with voltage present.
- DO NOT short across terminals PA and PC or across the DC capacitors.
- Install and close all covers before applying power or starting and stopping the drive controller.
- Before servicing the drive controller:
  - — Disconnect all power.
  - — Place a "DO NOT TURN ON" label on the drive controller disconnect.
  - — Lock the disconnect in the open position.
- Disconnect all power including external control power that may be present before servicing the drive controller. WAIT 15 MINUTES for the DC bus capacitors to discharge. Then follow the DC bus voltage measurement procedure beginning on page 23 to verify that the DC voltage is less than 45 Vdc. The drive controller LEDs are not accurate indicators of the absence of DC bus voltage.

Failure to follow this instruction will result in death or serious injury.

© 2003 Schneider Electric All Rights Reserved

INTRODUCTION 7
North American (U) Range (ATV11••••••U) 7
European (E) Range (ATV11••••••E) 7
Asian (A) Range (ATV11••••••A) 7
STORING AND SHIPPING 8
TECHNICAL CHARACTERISTICS 9
DIMENSIONS 16
MOUNTING AND TEMPERATURE CONDITIONS 17
MOUNTING DRIVE CONTROLLERS WITH BASE PLATES 19
MOUNTING THE EMC PLATE 20
MOUNTING IN A TYPE 12 OR IP54 METAL ENCLOSURE 20
Calculating Enclosure Size 20
Ventilation 22
BUS VOLTAGE MEASUREMENT PROCEDURE 23
ELECTRICAL INSTALLATION 23
POWER TERMINALS 25
RECOMMENDED FUSES 27
CONTROL TERMINALS 28
WIRING DIAGRAM 29
EUROPEAN COMMUNITY EMC DIRECTIVE 30
LOGIC INPUT APPLICATION FUNCTIONS 32
2-Wire Control 32
3-Wire Control 32
Operating Direction (Forward / Reverse) 32
Preset Speeds 33
Fault Reset 33
Second Ramp 33
DO OUTPUT APPLICATION FUNCTIONS 34
Current in the Motor (AO) 34
Motor Frequency (AO) 34
Frequency Threshold Reached (LO) 34
Reference Reached (LO) 34
Current Threshold Reached (LO) 34
DO Output Wiring Diagram 35
Configuration of the Analog Input 35
Wiring Diagram for the Analog Input 36

ENGLISH

© 2003 Schneider Electric All Rights Reserved

ENGLISH

PROGRAMMING 37
Precautions 37
Programming the Drive Controller: E (European) and U (North American) Ranges 38
Programming the Drive Controller: A (Asian) Range 39
ACCESS TO MENUS 40
FIRST LEVEL ADJUSTMENT PARAMETERS 41
drC MOTOR CONTROL MENU 43
FUn APPLICATION FUNCTIONS MENU 45
Incompatible Application Functions 46
tCC Menu 47
rrS, PS2, and rSF Menus 48
rP2, StP, and brA Menus 50
AdC and SFt Menus 51
FLr and dO Menus 53
Atr, LSr, and nPL Menus 55
bFr, IPL, SCS, and FCS Menus 57
SUP DISPLAY MENU 58
MAINTENANCE AND TROUBLESHOOTING 59
Precautions 59
Routine Maintenance 59
Fault Detection 59
Procedure 1: Checking the Supply Voltage 60
Procedure 2: Checking the Peripheral Equipment 60
LIST OF FAULTS AND CORRECTIVE ACTION 62
Drive Controller Does Not Start, No Fault Displayed 63
CONFIGURATION AND SETTINGS TABLES 64

© 2003 Schneider Electric All Rights Reserved

ENGLISH

INTRODUCTION

The ALTIVAR 11 (ATV11) family of adjustable speed AC drive controllers is used for controlling three-phase asynchronous motors. The controllers range from:

- 0.25 to 3 hp (0.37 to 2.2 kW), 208/230/240 V, single-phase input
- 0.25 to 3 hp (0.37 to 2.2 kW), 208/230/240 V, three-phase input
- 0.25 to 1 hp (0.37 to 0.75 kW), 100/115/120 V, single-phase input

ATV11 controllers have been designed for the global marketplace with three regional adaptations. Each version of the product has the same wiring configuration and functionality. The variations among the regional versions are summarized in the following sections.

North American (U) Range (ATV11••••••U)

- Designed for the North American market.
- Current ratings meet or exceed NEC requirements (see pages 9–11).

European (E) Range (ATV11••••••E)

- Designed for the European market.
- Available only in 230 V single-phase input line voltage.
- Current ratings have been adapted to meet European standards (see pages 9–11).
- Has an integrated EMC filter to meet European CE requirements.

Asian (A) Range (ATV11••••••A)

- Designed for the Asian market.
- Current ratings have been adapted to meet Asian standards (see pages 9–11).
- Speed reference potentiometer and run/stop buttons have been integrated onto the keypad display for local operation (see pages 39, 47, and 56).
- Logic inputs can be configured for negative logic (see page 56).

This instruction bulletin covers the technical characteristics, installation, wiring, programming, and maintenance of all ATV11 drive controllers.

© 2003 Schneider Electric All Rights Reserved

ENGLISH

RECEIVING AND PRELIMINARY INSPECTION

Before installing the ATV11 drive controller, read this manual and follow all precautions.

- Before removing the drive controller from its packaging, verify that the carton was not damaged in shipping. Carton damage usually indicates improper handling and the potential for device damage. If any damage is found, notify the carrier and your Square D/Schneider Electric representative.
- After removing the drive controller from its packaging, visually inspect the exterior for shipping damage. If any is found, notify the carrier and your sales representative. Do not install a damaged device.
- Verify that the drive controller nameplate and label conform to the packing slip and corresponding purchase order.

⚠ CAUTION

DAMAGED EQUIPMENT

Do not operate or install any drive controller that appears damaged.

Failure to follow this instruction can result in injury or equipment damage.

STORING AND SHIPPING

If the drive controller is not being immediately installed, store it in a clean, dry area with an ambient temperature between -25 and +69 °C (-13 to +156 °F). If the drive controller must be shipped to another location, use the original shipping carton and packing material to protect it.

© 2003 Schneider Electric All Rights Reserved

ENGLISH

TECHNICAL CHARACTERISTICS

Table 1: Single-Phase Supply Voltage: 200/240 V -15%, +10%, 50/60 Hz; Three-Phase Output

Motor		Mains		Drive Controller			
Motor Power[1]		Input Line Current[2]	Short Circuit Rating	Nominal Current	Max. Transient Current[3]	Power Dissipated at Nominal Load	Catalog Number[4]
kW	hp	A	kA	A	A	W	
North American (U) Range							
0.18	0.25	3.3	1	1.6	2.4	14.5	ATV11HU05M2U
0.37	0.5	6	1	2.4	3.6	23	ATV11•U09M2U
0.75	1	9.9	1	4.6	6.3	43	ATV11•U18M2U
1.5	2	17.1	1	7.5	11.2	77	ATV11HU29M2U
2.2	3	24.1	1	10.6	15	101	ATV11HU41M2U
Asian (A) Range							
0.18	0.25	3.3	1	1.4	2.1	14	ATV11HU05M2A
0.37	0.5	6	1	2.4	3.6	25	ATV11•U09M2A
0.75	1	9.9	1	4	6	40	ATV11•U18M2A
1.5	2	17.1	1	7.5	11.2	78	ATV11HU29M2A
2.2	3	24.1	1	10	15	97	ATV11HU41M2A
European (E) Range							
0.18	0.25	2.9	1	1.1	1.6	12	ATV11HU05M2E
0.37	0.5	5.3	1	2.1	3.1	20.5	ATV11•U09M2E
0.55	0.75	6.3	1	3	4.5	29	ATV11•U12M2E
0.75	1	8.6	1	3.6	5.4	37	ATV11•U18M2E
1.5	2	14.8	1	6.8	10.2	72	ATV11HU29M2E
2.2	3	20.8	1	9.6	14.4	96	ATV11HU41M2E

1 Power ratings are for a switching frequency of 4 kHz in continuous operation. The switching frequency is adjustable from 2 to 16 Hz. Above 4 kHz, the drive controller will reduce the switching frequency if an excessive temperature rise occurs. The temperature rise is sensed by a PTC probe in the power module. Derate the nominal drive current as follows for continuous operation above 4 kHz: 10% for 8 kHz; 20% for 12 kHz; 30% for 16 kHz.

2 Nominal voltage values: 208 V for the North American (U) Range; 200 V for the Asian (A) Range; 230 V for the European (E) Range.

3 For 60 seconds.

4 The symbol "•" in a catalog number indicates that the drive controller is available in two versions. For drive controllers with a heatsink, replace the "•" with an "H" (for example, ATV11**H**U09M2E). For drive controllers with a base plate, replace the "•" with a "P" (for example, ATV11**P**U09M2E).

© 2003 Schneider Electric All Rights Reserved

ENGLISH

Table 2: Three-Phase Supply Voltage: 200/230 V -15%, +15%, 50/60 Hz; Three-Phase Output

Motor		Mains		Drive Controller			
Motor Power[1]		Input Line Current[2]	Short Circuit Rating	Nominal Current	Max. Transient Current[3]	Power Dissipated at Nominal Load	Catalog Number[4]
kW	hp	A	kA	A	A	W	
North American (U) Range							
0.18	0.25	1.8	5	1.6	2.4	13.5	ATV11HU05M3U
0.37	0.5	3.6	5	2.4	3.6	24	ATV11•U09M3U
0.75	1	6.3	5	4.6	6.3	38	ATV11•U18M3U
1.5	2	11	5	7.5	11.2	75	ATV11HU29M3U
2.2	3	15.2	5	10.6	15	94	ATV11HU41M3U
Asian (A) Range							
0.18	0.25	1.8	5	1.4	2.1	13.5	ATV11HU05M3A
0.37	0.5	3.6	5	2.4	3.6	24	ATV11•U09M3A
0.75	1	6.3	5	4	6	38	ATV11•U18M3A
1.5	2	11	5	7.5	11.2	75	ATV11HU29M3A
2.2	3	15.2	5	10	15	94	ATV11HU41M3A

1 Power ratings are for a switching frequency of 4 kHz in continuous operation. The switching frequency is adjustable from 2 to 16 Hz. Above 4 kHz, the drive controller will reduce the switching frequency if an excessive temperature rise occurs. The temperature rise is sensed by a PTC probe in the power module. Derate the nominal drive current as follows for continuous operation above 4 kHz: 10% for 8 kHz; 20% for 12 kHz; 30% for 16 kHz.

2 Nominal voltage values: 208 V for the North American (U) Range; 200 V for the Asian (A) Range.

3 For 60 seconds.

4 The symbol "•" in a catalog number indicates that the drive controller is available in two versions. For drive controllers with a heatsink, replace the "•" with an "H" (for example, ATV11**H**U09M3A). For drive controllers with a base plate, replace the "•" with a "P" (for example, ATV11**P**U09M3A).

© 2003 Schneider Electric All Rights Reserved

ENGLISH

Table 3: Single-Phase Supply Voltage: 100/120 V -15%, +10%, 50/60 Hz; Three-Phase Output

Motor		Mains		Drive Controller			
Motor Power[1]		Input Line Current[2]	Short Circuit Rating	Nominal Current	Max. Transient Current[3]	Power Dissipated at Nominal Load	Catalog Number[4]
kW	hp	A	kA	A	A	W	
North American (U) Range							
0.18	0.25	6	1	1.6	2.4	14.5	ATV11HU05F1U
0.37	0.5	9	1	2.4	3.6	23	ATV11•U09F1U
0.75	1	18	1	4.6	6.3	43	ATV11HU18F1U
Asian (A) Range							
0.18	0.25	6	1	1.4	2.1	14	ATV11HU05F1A
0.37	0.5	9	1	2.4	3.6	25	ATV11•U09F1A
0.75	1	18	1	4	6	40	ATV11HU18F1A

1 Power ratings are for a switching frequency of 4 kHz in continuous operation. The switching frequency is adjustable from 2 to 16 Hz. Above 4 kHz, the drive controller will reduce the switching frequency if an excessive temperature rise occurs. The temperature rise is sensed by a PTC probe in the power module. Derate the nominal drive current as follows for continuous operation above 4 kHz: 10% for 8 kHz; 20% for 12 kHz; 30% for 16 kHz.

2 Values for 100 V nominal voltage.

3 For 60 seconds.

4 The symbol "•" in a catalog number indicates that the drive controller is available in two versions. For drive controllers with a heatsink, replace the "•" with an "H" (for example, ATV11**H**U09F1A). For drive controllers with a base plate, replace the "•" with a "P" (for example, ATV11**P**U09F1A).

© 2003 Schneider Electric All Rights Reserved

ENGLISH

Table 4: Minimum Dynamic Braking Resistance Values For Use with External Braking Module VW3A11701

230 V Single-Phase Controllers ATV11•••••••	PA/PB Minimum Resistance Ω	230 V Three-Phase Controllers ATV11•••••••	PA/PB Minimum Resistance Ω	115 V Single-Phase Controllers ATV11•••••••	PA/PB Minimum Resistance Ω
HU05M2U, A, E	75	HU05M3U, A	75	HU05F1U, A	75
HU09M2U, A, E	75	HU09M3U, A	75	HU09F1U, A	75
HU12M2E	75				
HU18M2U, A, E	75	HU18M3U, A	75	HU18F1U, A	75
HU29M2U, A, E	51	HU29M3U, A	51	PU09F1U	75
HU41M2U, A, E	51	HU41M3U, A	51		
PU09M2U	75	PU09M3U	75		
PU18M2U	75	PU18M3U	75		

⚠ WARNING

BRAKING RESISTOR OVERHEATING

- Select the proper braking resistors for the application.
- Provide adequate thermal protection.
- Enclose the braking resistors in an enclosure that is suitable for the environment.

Failure to follow this instruction can result in serious injury or equipment damage.

© 2003 Schneider Electric All Rights Reserved

ENGLISH

Table 5: Environmental Specifications

Codes and standards	ATV11 drive controllers have been developed in accordance with IEC and EN, the strictest international standards and recommendations regarding electrical equipment for industrial monitoring; specifically, EN 50178 governing electromagnetic compatibility and conducted and radiated emissions.
Electromagnetic compatibility	• IEC/EN 61000-4-2 level 3 • IEC/EN 61000-4-3 level 3 • IEC/EN 61000-4-4 level 4 • IEC/EN 61000-4-5 level 3 (power access) • IEC/EN 61800-3, environments 1 and 2
Conducted and radiated emissions for drive controllers	**All ATV11 controllers**: IEC/EN 61800-3, environments 2 (industrial network) and 1 (public utility network) in limited distribution. **ATV11•U05M2E–U18M2E**: EN 55011, EN 55022 Class B, 2: 12 kHz for motor cables ≤ 16 ft. (5 m); and Class A (Group 1), 2: 16 kHz for motor cables ≤ 33 ft. (10 m). **ATV11•U29M2E–U41M2E**: EN 55011, EN 55022 Class B, 4: 16 kHz for motor cables ≤ 16 ft. (5 m); and Class A (Group 1), 4: 16 kHz for motor cables ≤ 33 ft. (10 m). **ATV11HU05M2E–HU41M2E**: With additional EMC filter: EN 55011, EN 55022 Class B, 2: 16 kHz for motor cables ≤ 66 ft. (20 m); and Class A (Group 1), 2: 16 kHz for motor cables ≤ 165 ft. (50 m). **ATV11HU05••U–HU41••U and ATV11HU05••A–HU41••A**: With additional EMC filter: EN 55011, EN 55022 Class B, 2: 16 kHz for motor cables ≤ 16 ft. (5 m); and Class A (Group 1), 2: 16 kHz for motor cables ≤ 66 ft. (20 m).
CE markings	The drive controllers are CE marked on the basis of European directives governing low voltage (73/23/EEC and 93/68/EEC) and EMC (89/336/EEC).
Agency approvals	UL, CSA, NOM, C-TICK, and CUL
Degree of protection	IP20
Vibration resistance[1]	Per IEC/EN 60068-2-6: • 1.5 mm peak from 3 to 13 Hz • 1 gn from 13 to 200 Hz
Shock resistance	15 gn for 11 ms per IEC/EN 60068-2-27
Maximum relative humidity	5–93% non-condensing and without dripping, per IEC 60068-2-3
Maximum ambient temperature	**Storage**: -25 to +69 °C (-13 to +156 °F) **Operating**: -10 to +50 °C (14 to 122 °F) by removing the protective cover from the top of the drive controller (see page 17). Up to +60 °C, derate the current by 2.2% for every °C above 50 °C.
Maximum altitude	1000 m (3280 ft.) without derating. Above 1000 m, derate the current by 1% for each additional 100 m (328 ft.).

[1] Drive controller without DIN rail option.

© 2003 Schneider Electric All Rights Reserved

ENGLISH

Table 6: Drive Characteristics

Output frequency	0–200 Hz
Switching frequency	2–16 kHz
Speed range	1–20
Transient overtorque	150% of rated motor torque
Braking torque	20% of nominal motor torque without dynamic braking (typical value). Up to 150% with optional dynamic braking module and resistor.
Maximum transient current	150% of rated drive controller current for 60 seconds
Voltage/frequency ratio	Sensorless flux vector control with pulse width modulation (PWM) type motor control signal. Factory preset for most constant-torque applications.

Table 7: Electrical Characteristics

Power supply voltage	**ATV11•U••M2•**: 1-phase, 200 -15% to 240 +10% **ATV11•U••M3•**: 3-phase, 200 -15% to 230 +15% **ATV11•U••F1•**: 1-phase, 100 -15% to 120 +10%
Power supply frequency	50 Hz ±5% or 60 Hz ±5%
Power supply AIC rating	≤ 1000 for 1-phase power supply ≤ 5000 for 3-phase power supply
Output voltage	Maximum 3-phase voltage equal to: • **ATV11•U••M2**: the input voltage • **ATV11•U••F1**: twice the input voltage
Maximum motor cable length	• 50 m (164 ft.) for shielded cable • 100 m (328 ft.) for non-shielded cable Verify that the motor is designed for use with AC drive controllers. Cable runs longer than 12.2 m (40 ft.) may require output filters to reduce voltage spikes at the motor terminals.
Galvanic isolation	Galvanic isolation between power and control (inputs, outputs, and power supplies)
Available internal supplies	Protected against short circuits and overloads: • + 5 V ±5% for speed reference potentiometer (2.2 to 10 kΩ), max. 10 mA • + 15 V ±15% for control inputs, max. 100 mA
Analog input AI1	1 programmable analog input. Maximum sampling time: 20 ms, resolution 0.4%, linearity ±5%: • Voltage: 0–5 V or 0–10 V, impedance 40 kΩ • Current: 0–20 mA or 4–20 mA (without added resistance), impedance 250 Ω

© 2003 Schneider Electric All Rights Reserved

ENGLISH

Table 7: Electrical Characteristics *(continued)*

Logic inputs, LI	4 programmable logic inputs, impedance: 5 kΩ Power supply: internal 15 V or external 24 V (minimum 11 V, maximum 30 V) With multiple assignments, several functions can be combined on a single input (example: LI1 assigned to forward and preset speed 2, LI3 assigned to reverse and preset speed 3). Positive logic: state = 0 if < 5 V, state = 1 if > 11 V. Maximum sampling time: 20 ms. Negative logic: available by programming only in A-range drive controllers. State = 0 if > 11 V or unwired cable input, state = 1 if < 5 V. Maximum sampling time: 20 ms.
Output, DO	Factory setting: • Pulse width modulation (PWM) type open collector output at 2 kHz. Can be used on a meter. • Maximum current: 10 mA. • Impedance: 1 kΩ; linearity: ±1%; maximum sampling time: 20 ms. Can be configured as a logic output: • Open collector logic output: impedance: 100 Ω, maximum: 50 mA. • Internal voltage: see available internal supplies above. • External voltage: maximum 30 V, 50 mA.
Relay outputs	1 protected relay logic output (contact open if there is a fault). Minimum switching capacity: 10 mA for 24 Vdc. Maximum switching capacity: • On resistive load (power factor = 1 and L/R = 0 ms): 5 A for 250 Vac or 30 Vdc • On inductive load (power factor = 0.4 and L/R = 7 ms): 2 A for 250 Vac or 30 Vdc
Drive controller protection	• Thermal protection against overheating via a built-in PTC probe in the power module • Short circuit protection between output phases • Overcurrent protection between output and ground phases at power-up only • Overvoltage and undervoltage protection • Single-phasing protection, in 3-phase
Motor protection	Thermal protection is integrated in the drive controller by I^2t calculation. Thermal memory is erased at power-up.
Ground insulation resistance	>500 MΩ (galvanic isolation)
Frequency resolution	• Display 0.1 Hz • Analog inputs: 0.1 Hz for maximum 200 Hz
Time constant upon a change of setpoint	5 ms

© 2003 Schneider Electric All Rights Reserved

ENGLISH

DIMENSIONS

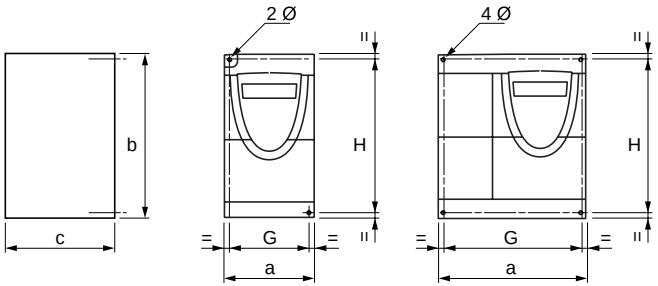

ATV11U18F1U, U29••U, U41••U

	a	b	c	G	H	Ø	Weight
ATV11H••••••	**mm (in.)**	**mm (in.)**	**mm (in.)**	**mm (in.)**	**mm (in.)**	**mm (in.)**	**kg (lb)**
U05••U, E U05••A	72 (2.835) 72 (2.835)	142 (5.591) 142 (5.591)	101 (3.976) 108 (4.252)	60 (2.362) 60 (2.362)	131 (5.157) 131 (5.157)	2 x 4 (0.157)	0.70 (1.547)
U09••U U09••E U09••A	72 (2.835) 72 (2.835) 72 (2.835)	142 (5.591) 142 (5.591) 142 (5.591)	125 (4.921) 125 (4.921) 132 (5.197)	60 (2.362) 60 (2.362) 60 (2.362)	131 (5.157) 120 (4.724) 131 (5.157)	2 x 4 (0.157)	0.85 (1.879)
U12••E	72 (2.835)	142 (5.591)	138 (5.433)	60 (2.362)	120 (4.724)	2 x 4 (0.157)	0.92 (2.033)
U18M•U U18M2E U18M•A	72 (2.835) 72 (2.835) 72 (2.835)	147 (5.787) 142 (5.591) 142 (5.591)	138 (5.433) 138 (5.433) 145 (5.709)	60 (2.362) 60 (2.362) 60 (2.362)	131 (5.157) 120 (4.724) 131 (5.157)	2 x 4 (0.157)	0.95 (2.099) 0.92 (2.033) 0.92 (2.033)
U18F1U U18F1A	117 (4.606) 117 (4.606)	142 (5.591) 142 (5.591)	156 (6.142) 163 (6.417)	106 (4.173) 106 (4.173)	131 (5.157) 131 (5.157)	4 x 4 (0.157)	1.6 (3.536)
U29••U, E U29••A	117 (4.606) 117 (4.606)	142 (5.591) 142 (5.591)	156 (6.142) 163 (6.417)	106 (4.173) 106 (4.173)	131 (5.157) 131 (5.157)	4 x 4 (0.157)	1.6 (3.536)
U41••U, E U41••A	117 (4.606) 117 (4.606)	142 (5.591) 142 (5.591)	156 (6.142) 163 (6.417)	106 (4.173) 106 (4.173)	131 (5.157) 131 (5.157)	4 x 4 (0.157)	1.6 (3.536)

ATV11P All ratings: U, E All ratings: A	72 (2.835) 72 (2.835)	142 (5.591) 142 (5.591)	101 (3.976) 108 (4.252)	60 (2.362) 60 (2.362)	131 (5.157) 131 (5.157)	2 x 5 (0.197)	0.67 (1.481)

© 2003 Schneider Electric All Rights Reserved

ENGLISH

MOUNTING AND TEMPERATURE CONDITIONS

⚠ DANGER

HAZARDOUS VOLTAGE

Before working on this equipment:

- Disconnect all power.
- Place a "DO NOT TURN ON" label on the drive controller disconnect.
- Lock the disconnect in the open position.

Failure to follow this instruction will result in death or serious injury.

Install the drive controller vertically ±10° with the output power terminals at the bottom.

Do not place the drive controller close to heating sources.

Leave sufficient free space around the drive controller to ensure that air can circulate from the bottom to the top of the unit.

Leave a minimum of 0.4 in. (10 mm) of free space in front of the drive controller.

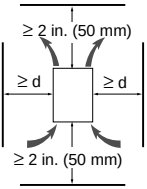

14 to 104 °F (-10 to 40 °C):	• d ≥ 2 in. (50 mm): no special precautions. • d = 0 (side-by-side controllers): remove the protective cover as shown in the figure below.
104 to 122 °F (40 to 50 °C):	• d ≥ 2 in. (50 mm): remove the protective cover as shown below.
122 to 140 °F (50 to 60 °C):	• d ≥ 2 in. (50 mm): remove the protective cover as shown below and derate the drive nominal current by 2.2% for every °C above 50°C.

© 2003 Schneider Electric All Rights Reserved

ENGLISH

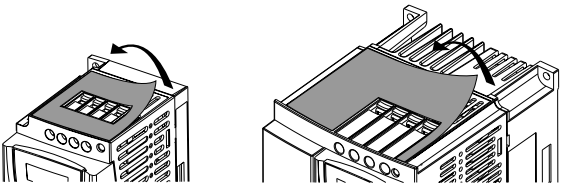

ATV11U18F1U, U29••U, U41••U

NOTE: Monitor the tHd parameter (in the SUP menu) during normal operation to verify the drive controller thermal state.

The following drive controllers include a fan. The fan automatically turns on when the drive controller is powered up.

- ATV11HU18F1A
- ATV11HU18F1U
- ATV11•U18M2U
- ATV11•U18M3U
- ATV11HU29•••
- ATV11HU41•••

© 2003 Schneider Electric All Rights Reserved

ENGLISH

MOUNTING DRIVE CONTROLLERS WITH BASE PLATES

ATV11P drive controllers can be mounted on a steel or aluminum machined surface, provided that:

- The maximum ambient temperature is 40 °C (104 °F).
- The drive controller is mounted vertically ±10°.
- The drive controller is mounted at the center of a surface exposed to open air, with a minimum thickness of 0.4 in. (10 mm) and with a minimum square cooling area (S) of 1.3 ft^2 (0.12 m^2) for steel and 1 ft^2 (0.09 m^2) for aluminum.
- The surface support area for the drive controller is a minimum of 5.6 x 2.9 in. (142 x 72 mm) with a machined surface smoothness of 100 µm and a roughness of 3.2 µm maximum.
- The tapped holes are milled lightly to remove any burrs.
- The whole support surface of the drive controller is coated with thermal contact grease.

NOTE: Monitor the tHd parameter (in the SUP menu) during normal operation to verify the drive controller thermal state.

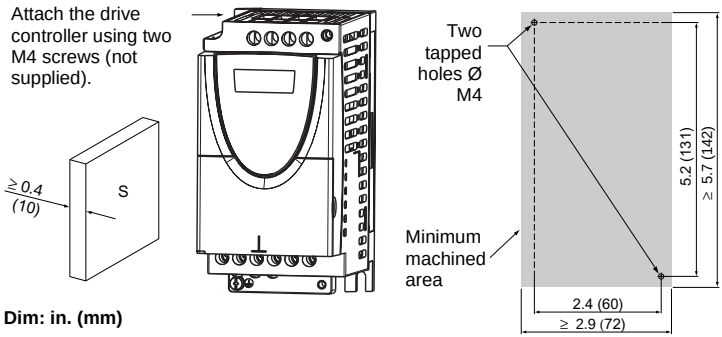

Dim: in. (mm)

© 2003 Schneider Electric All Rights Reserved

ENGLISH

MOUNTING THE EMC PLATE

An EMC plate, VW3A11831 (ordered separately), is available for ATV11 drive controllers. To mount the EMC plate, align it with the holes in the drive controller heatsink and secure it with the two screws provided, as shown in the figures below. See pages 30–31 for wiring instructions.

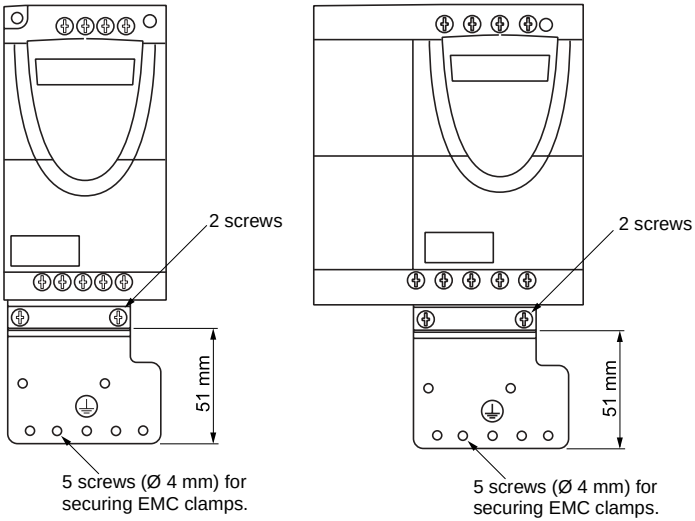

ATV11U18F1U, U29••U, U41••U

MOUNTING IN A TYPE 12 OR IP54 METAL ENCLOSURE

Calculating Enclosure Size

The equation for calculating the maximum allowable thermal resistance of the enclosure, Rth (°C/W), is as follows:

$$Rth = \frac{T_i - T_o}{P}$$

T_i = Max. internal ambient temp. (°C) around the controller
T_o = Max. external ambient temp. (°C) around enclosure
P = Total power dissipated in enclosure (W)

For the power dissipated by the drive controllers at rated load, see Tables 1–3 on pages 9–11.

© 2003 Schneider Electric All Rights Reserved

The useful heat exchange surface area, S (in^2), of a wall-mounted enclosure generally consists of the sides, top, and front. The minimum surface area required for a drive controller enclosure is calculated as follows:

$$S = \frac{K}{Rth}$$

Rth = Thermal resistance of the enclosure (calculated above)
K = Thermal resistance per square inch of the enclosure

NOTE: Contact the enclosure manufacturer for K factors.

Consider the following points when sizing the enclosure:

- Use only metallic enclosures, since they have good thermal conduction.
- This procedure does not consider radiant or convected heat load from external sources. Do not install enclosures where external heat sources (such as direct sunlight) can add to the enclosure heat load.
- If additional devices are present inside the enclosure, consider the heat load of the devices in the calculation.
- The actual useful area for convection cooling of the enclosure varies depending upon the mounting method. The mounting method must allow for free air movement over all surfaces considered for convection cooling.

The following sample illustrates calculation of the enclosure size for an ATV11HU18M3U drive controller mounted in a Type 12 or IP54 enclosure.

- Maximum external temperature: T_o = 25 °C (77 °F)
- Power dissipated inside the enclosure: P = 38 W
- Maximum internal temperature: T_i = 40 °C (104 °F)
- Thermal resistance per square inch of the enclosure: K = 186

Calculate the maximum allowable thermal resistance, Rth:

$$Rth = \frac{40\ °C - 25\ °C}{38\ W} = 0.395\ °C/W$$

Calculate the minimum useful heat exchange surface area, S:

$$S = \frac{186}{0.395} = 470.9\ in^2$$

© 2003 Schneider Electric All Rights Reserved

ENGLISH

Useful heat exchange surface area (S) of the proposed wall-mounted enclosure:

- Height: 28 in. (711 mm)
- Width: 24 in. (610 mm)
- Depth: 12 in (305 mm)

$$S = \underbrace{(24 \times 28)}_{\text{front area}} + \underbrace{(24 \times 12)}_{\text{top area}} + \underbrace{2(28 \times 12)}_{\text{side area}} = 1632 \text{ in}^2$$

If the selected enclosure does not provide the required surface area or does not meet application needs, consider the following:

- Use a larger enclosure.
- Add a passive heat exchanger to the enclosure.
- Add an air conditioning unit to the enclosure.

Ventilation

When mounting the drive controller inside a Type 12 or IP54 enclosure:

- Mount the drive controller with the minimum clearances specified in "Mounting and Temperature Conditions" on page 17.
- Follow the installation precautions on page 23.
- A stirring fan may be necessary to circulate the air inside the enclosure to prevent hot spots in the drive controller and to distribute the heat uniformly to surfaces used for convection cooling.

⚠ CAUTION

CONDENSATION

Where condensation is possible, keep the drive controller powered up when the motor is not running, or install thermostatically controlled strip heaters.

Failure to follow this instruction can result in injury or equipment damage.

© 2003 Schneider Electric All Rights Reserved

ENGLISH

BUS VOLTAGE MEASUREMENT PROCEDURE

⚠ DANGER

HAZARDOUS VOLTAGE

Read and understand the precautions on page 4 before performing this procedure.

Failure to follow this instruction will result in death or serious injury.

The bus voltage can exceed 400 Vdc. Use appropriately rated measuring equipment when performing this procedure. To measure the bus capacitor voltage:

1. Disconnect all power from the drive controller.
2. Wait 15 minutes to allow the DC bus to discharge.
3. Measure the DC bus voltage between the PA (+) and PC (–) terminals to verify that the DC voltage is less than 45 Vdc. Refer to "Power Terminals" on page 25 for the location of the terminals.
4. If the bus capacitors are not fully discharged, contact your local Square D/Schneider Electric representative—do not operate the drive controller.

ELECTRICAL INSTALLATION

Ensure that the electrical installation of this drive controller conforms to the appropriate national and local codes.

- Verify that the voltage and frequency of the input supply line and the voltage, frequency, and current of the motor match the rating on the drive controller nameplate.

⚠ DANGER

HAZARDOUS VOLTAGE

Ground equipment using the provided ground connecting point as shown in the figure below. The drive controller panel must be properly grounded before power is applied.

Failure to follow this instruction will result in death or serious injury.

© 2003 Schneider Electric All Rights Reserved

ENGLISH

- Verify that resistance to ground is 1 Ω or less. Ground multiple controllers as shown in the figure. Do not loop the ground cables or connect them in series.

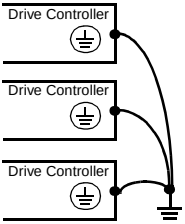

⚠ WARNING

INADEQUATE OVERCURRENT PROTECTION

- Overcurrent protective devices must be properly coordinated.
- The National Electrical Code requires branch circuit protection. Use the fuses recommended on the drive controller nameplate to achieve published fault withstand current ratings.
- Do not connect the drive controller to a power feeder whose short circuit capacity exceeds the drive controller withstand fault rating listed on the drive controller nameplate.

Failure to follow these instructions can result in death, serious injury, or equipment damage.

- Provide overcurrent protection. To achieve the fault-withstand current rating listed on the drive controller nameplate, install the line power fuses recommended on the drive controller nameplate.

⚠ WARNING

IMPROPER WIRING CONNECTIONS

- Do not apply input line voltage to the output terminals (U, V, W). This will damage the drive controller.
- Check the power connections before energizing the drive controller.
- If replacing another drive controller, verify that all wiring connections to the ATV11 drive controller comply with all wiring instructions in this manual.

Failure to follow these instructions can result in death, serious injury, or equipment damage.

© 2003 Schneider Electric All Rights Reserved

- Do not use mineral-impregnated cables. Select motor cabling with low phase-to-phase and phase-to-ground capacitance.
- Motor cables must be at least 20 in. (0.5 m) long.
- Do not run control, power, or motor wiring in the same conduit. Do not run motor wiring from different drive controllers in the same conduit. Separate metallic conduit carrying power wiring from metallic conduit carrying control wiring by at least 3 in. (8 cm). Separate non-metallic conduits or cable trays used to carry power wiring from metallic conduit carrying control wiring by at least 12 in. (31 cm). Always cross power and control wiring at right angles.
- Do not immerse motor cables in water.
- Do not use lightning arrestors or power factor correction capacitors on the output of the drive controller.
- Equip all inductive circuits near the drive controller (such as relays, contactors, and solenoid valves) with electrical noise suppressors, or connect them to a separate circuit.

POWER TERMINALS

You can access the power terminals without opening the cover. The drive controller has through wiring—the line supply is at the top of the drive controller (R/L1–S/L2 in single-phase 230 V; R/L1–S/L2–T/L3 in three-phase 230 V; R/L1–N in single-phase 120 V) and the motor power supply is at the bottom (U–V–W).

NOTE: Connect the power terminals before connecting the control terminals.

Table 8: Power Terminal Specifications

	Maximum Connection Capacity		Tightening Torque	
ATV11•••••••	**AWG**	**mm^2**	**lb-in**	**N•m**
U05••• U09••• U18M••	AWG 14	1.5	6.6	0.75
U18F1• U29••• U41•••	AWG 10	4	8.9	1

© 2003 Schneider Electric All Rights Reserved

ENGLISH

Table 9: Power Terminal Functions

Terminals	Function	For ATV11
t	Ground terminal	All ratings
R/L1 S/L2	Power supply	ATV11••••M2•
R/L1 S/L2 T/L3		ATV11••••M3•
R/L1 N		ATV11••••F1•
PA/+	+ Output (DC) to the braking module	All ratings
PC/-	- Output (DC) to the braking module	All ratings
U V W	Outputs to the motor	All ratings
t	Ground terminal	All ratings

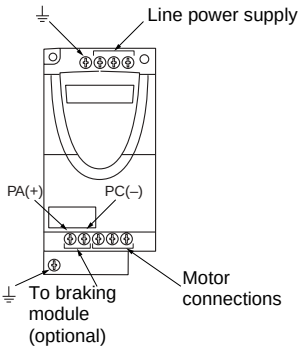

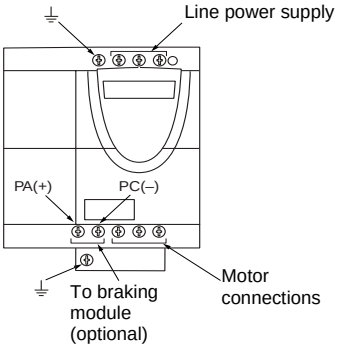

ATV11U18F1U, U29••U, U41••U

© 2003 Schneider Electric All Rights Reserved

ENGLISH

RECOMMENDED FUSES

Table 10: Recommended Fuses for 230 V Single-Phase Controllers

Motor		Drive Controller	600 V Fuses	
kW	hp	ATV11H••••••	Class CC	Class J [1]
0.18	0.25	HU05M2U, E, A	4	4
0.37	0.50	HU09M2U, E, A	8	8
0.55	0.75	HU12M2E	8	8
0.75	1	HU18M2U, E, A	12	12
1.50	2	HU29M2U, E, A	22	22
2.20	3	HU41M2U, E, A	30	30
0.37	0.5	PU09M2U, E, A	8	8
0.75	1	PU18M2U, E, A	12	12

[1] Use either fast acting or time delay Class J fuses.

Table 11: Recommended Fuses for 230 V Three-Phase Controllers

Motor		Drive Controller	600 V Fuses	
kW	hp	ATV11H••••••	Class CC	Class J [1]
0.18	0.25	HU05M3U, A	3	3
0.37	0.50	HU09M3U, A	5	5
0.75	1	HU18M3U, A	8	8
1.50	2	HU29M3U, A	15	15
2.20	3	HU41M3U, A	20	20
0.37	0.5	PU09M3U, A	5	5
0.75	1	PU18M3U, A	8	8

[1] Use either fast acting or time delay Class J fuses.

Table 12: Recommended Fuses for 115 V Single-Phase Controllers

Motor		Drive Controller	600 V Fuses	
kW	hp	ATV11H••••••	Class CC	Class J [1]
0.18	0.25	HU05F1U, A	8	8
0.37	0.50	HU09F1U, A	12	12
0.75	1	HU18F1U, A	22	22
0.37	0.5	PU09F1U, A	12	12

[1] Use either fast acting or time delay Class J fuses.

© 2003 Schneider Electric All Rights Reserved

ENGLISH

CONTROL TERMINALS

Open the cover as shown below to access the control terminals.

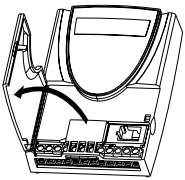

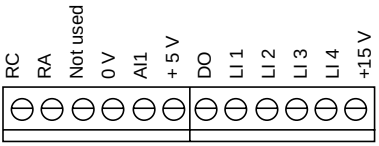

Maximum wire gauge: AWG 16 (1.5 mm^2)
Maximum tightening torque: 4.4 lb-in (0.5 N•m).

Terminal	Function	Electrical Characteristics
RC RA	Fault relay contact (open if there is a fault or the drive controller is off)	Min. switching capacity: 10 mA for 24 Vdc Max. switching capacity: • 2 A for 250 Vac and 30 Vdc on inductive load Time constant = 0.4 – (inductance/resistance) = 7 ms • 5 A for 250 Vac and 30 Vdc on resistive load Time constant = 1 – (inductance/resistance) = 0
0 V	Common for logic inputs/outputs	0 V
AI1	Voltage or current analog input	Analog input 0–5 V or 0–10 V (30 V maximum): • Impedance: 40 kΩ • Resolution: 0.4% • Precision, linearity: ± 5% • Sampling time: 20 ms max. Analog input 0–20 mA or 4–20 mA: • Impedance: 250 Ω (with no external resistor) • Resolution: 0.4% • Precision, linearity: ± 5% • Sampling time: 20 ms max.
+5 V	Power supply for reference potentiometer: 2.2 to 10 kΩ	• Precision: 0–5% • Max. current available: 10 mA
DO	Output (can be configured as analog or logic output)	Analog output • PWM open collector analog output at 2 kHz • Voltage: 30 V max. • Impedance: 1 kΩ, 10 mA max. • Linearity: ± 1% • Sampling time: 20 ms max. Logic output open collector • Voltage: 30 V max. • Impedance: 100 Ω, 50 mA max. • Sampling time: 20 ms max.
LI1 LI2 LI3 LI4	Programmable logic inputs	• Power supply + 15 V (max. 30 V) • Impedance 5 kΩ • Positive logic: state 0 if < 5 V, state 1 if > 11 V • Negative logic: state 1 if < 5 V, state 0 if > 11 V or switched off (A range only) • Sampling time: 20 ms max.
+15 V	Logic input power supply	+15 V, ±15% (protected against short circuits and overloads) Maximum current available: 100 mA

© 2003 Schneider Electric All Rights Reserved

ENGLISH

WIRING DIAGRAM

Single phase line supply 100–120 V

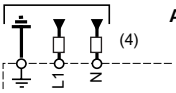

Single phase line supply 200–230 V

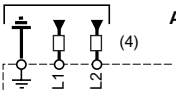

3-phase line supply 200–240 V

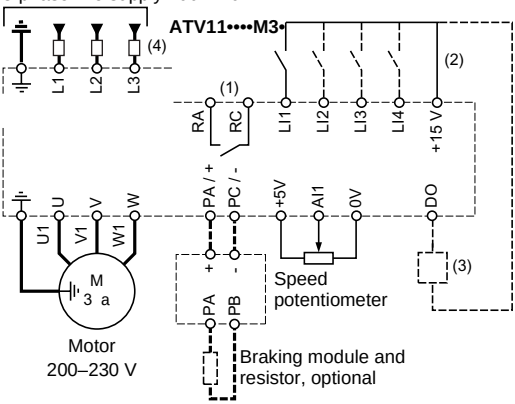

NOTE: The line supply terminals are shown at the top and the motor terminals are shown at the bottom. Connect the power terminals before connecting the control terminals. Install surge suppressors on all inductive circuits located near the drive controller or coupled to the same circuit.

(1) Fault relay contacts for remote indication of drive controller status.

(2) Internal + 15 V. If an external source is used (30 V max.), connect the 0 V of the source to the 0 V terminal, and do not use the + 15 V terminal on the drive controller.

(3) Meter or low level relay.

(4) Refer to the drive controller nameplate for recommended fuses. Fast acting or time delay Class J fuses can be used.

© 2003 Schneider Electric All Rights Reserved

ENGLISH

EUROPEAN COMMUNITY EMC DIRECTIVE

The ATV11 controller is considered to be a component. It is neither a machine nor a piece of equipment ready for use in accordance with the European Community EMC directive (machinery directive or electromagnetic compatibility directive). It is the user's responsibility to ensure that the machine meets these standards.

To meet EN55011 Class A requirements, follow these installation recommendations:

- Ensure that the ground connections of the drive controller, the motor, and the cable shields are at equal potential.
- Use shielded cables with the shields connected to ground at both ends of the motor cable, control cables, and the braking resistor (if used). Conduit can be used for part of the shielding length, provided that there is no break in continuity.
- Ensure maximum separation between the power supply cable (line supply) and the motor cable.

Installation Diagram

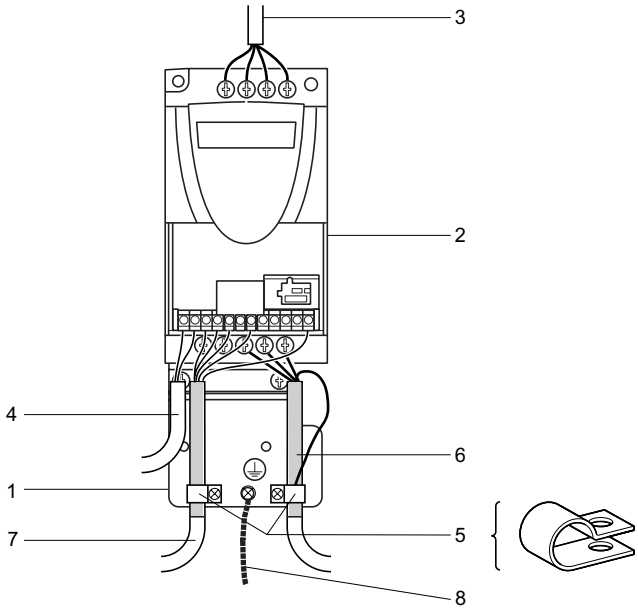

© 2003 Schneider Electric All Rights Reserved

ENGLISH

The following table describes the parts shown in the installation diagram on page 30.

Item	Description
1	EMC mounting plate, ordered separately (catalog number VW3A11831).
2	ALTIVAR 11 drive controller.
3	Non-shielded power supply wires or cables.
4	Non-shielded wires for the output of the safety relay contacts.
5	The shields for the motor connection and the connection to control devices (items 6 and 7) must be securely attached to the EMC mounting plate with stainless steel clamps (item 5). Strip the cables to expose the shields. Apply appropriately sized clamps around the stripped portion of the cables and fasten them to the EMC plate.
6	Shielded cable for connection to the motor, with shielding connected to ground at both ends. Do not interrupt the shielding. If using intermediate terminal blocks, they must be in EMC-shielded metal boxes.
7	Shielded cable for connection to control/command devices. For applications which require a large number of conductors, use small cross-sections (0.5 mm^2). Do not interrupt the shielding. If intermediate terminal blocks are used, they must be in EMC-shielded metal boxes.
8	Ground conductor (cross section 10 mm^2).

NOTE: If using an additional input filter, mount it on the drive controller and connect it directly to the line supply with an unshielded cable. Then connect the power supply wiring (item 3) to the drive controller using the filter output cable. Although there is an HF equipotential ground connection between the drive controller, the motor, and the cable shielding, you must still connect the PE protective conductors (green-yellow) to the appropriate terminals on each of the devices.

NOTE: For very long cable runs, you may need to disconnect the shield at the motor end to alleviate noise generation.

© 2003 Schneider Electric All Rights Reserved

ENGLISH

LOGIC INPUT APPLICATION FUNCTIONS

Each of the following functions can be assigned to one of the logic inputs. A single logic input can activate several functions at the same time (reverse and 2nd ramp, for example). You must therefore ensure that these functions are compatible.

2-Wire Control

To select two-wire control, in the FUn menu, set the ACt function of tCC to 2C. The same logic input controls both run (forward or reverse) and stop.

There are three types of 2-wire control:

1. tCt = LEL: state 0 or 1 is taken into account for run or stop.
2. tCt = trn: a change of state (transition or edge) must occur to initiate operation, in order to prevent accidental restarts after a power supply interruption.
3. tCt = PFO: state 0 or 1 is taken into account for run or stop, but the forward input always takes priority over the reverse input.

3-Wire Control

To select three-wire control, in the FUn menu, set the ACt function of tCC to 3C. Run (forward or reverse) and stop are controlled by 2 different logic inputs. LI1 is always assigned to the stop function. A stop on ramp is obtained on opening (state 0). The pulse on the run input is stored until the stop input opens. When the drive controller is powered up, upon a manual fault reset, or after a stop command, the motor can only be supplied with power once the forward and reverse commands have been reset.

Operating Direction (Forward / Reverse)

With 2-wire control, forward operation must be assigned to LI1. It cannot be reassigned to any other logic input. With 3-wire control, forward operation must be assigned to LI2 and cannot be reassigned to any other logic input.

To disable reverse operation for applications with a single direction of motor rotation, do not assign any logic input to reverse operation (in the FUn menu, set rrS to nO).

© 2003 Schneider Electric All Rights Reserved

Preset Speeds

You can assign two or four preset speeds, requiring one or two logic inputs respectively.

Assign LIx to LIA first, then assign LIy to LIb. Consult the following table.

2 Preset Speeds		4 Preset Speeds		
Assign: LIx to LIA		Assign LIx to LIA, then LIy to LIb		
LIx	Speed Reference	LIy	LIx	Speed Reference
0	Reference (min. = LSP)	0	0	Reference (Min. = LSP)
1	SP2	0	1	SP2
		1	0	SP3
		1	1	SP4

The preset speeds take priority over the reference given by the analog input or by the potentiometer (on A range controllers only).

Fault Reset

A change in state from 0 to 1 of the logic input assigned to fault reset clears the stored fault and resets the drive controller if the cause of the fault is removed. The exceptions are the OCF (overcurrent), SCF (motor short circuit), and InF (internal fault) faults, which require removal of power from the drive controller.

Second Ramp

This function allows switching between the primary (ACC, DEC) and the secondary (AC2, DE2) acceleration and deceleration ramps by activating a logic input assigned to the ramp switching function (rP2).

© 2003 Schneider Electric All Rights Reserved

ENGLISH

DO OUTPUT APPLICATION FUNCTIONS

The DO output can be used as an analog output or a logic output depending on the function chosen. In either mode, the DO terminal is current sinking (an open collector output).

- When the DO terminal is used as a logic output and is active, it is low with respect to the 0 V terminal.
- When used as an analog output, the DO terminal is switched at a 2 kHz rate using a pulse width modulated signal. Therefore:
  - The load device must be capable of averaging the PWM waveform.
  - The full signal is dependent on the value of the voltage source (Vs) and the sum of the resistance of the external device (Z) and the fixed 1 kΩ internal resistance.

Current in the Motor (AO)

The full signal corresponds to 200% of the nominal drive current.

Motor Frequency (AO)

The full signal corresponds to 100% HSP.

Frequency Threshold Reached (LO)

Output active if the motor frequency exceeds an adjustable threshold.

Reference Reached (LO)

Output active if the motor frequency reaches the reference.

Current Threshold Reached (LO)

Output active if the motor current exceeds the adjustable threshold.

© 2003 Schneider Electric All Rights Reserved

DO Output Wiring Diagram

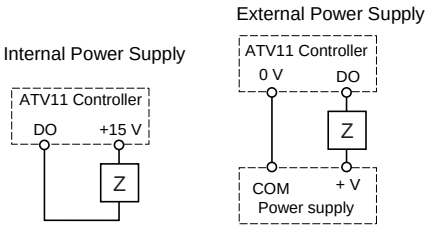

If a logic output is assigned, Z is an external device such as a low-voltage relay. If an analog output is assigned, Z is an external device such as a meter.

For the resistance of a meter (R), the maximum voltage (V_Z) delivered is:

$$Vz = Vs \times \frac{R(\Omega)}{R(\Omega) + 1000(\Omega)}$$

The voltage source (Vs) is the 15 V internal supply or an external source of 30 V maximum.

Configuration of the Analog Input

Configure the analog input as one of the following:

- 0–5 V
- 0–10 V
- 0–20 mA
- 4–20 mA

© 2003 Schneider Electric All Rights Reserved

ENGLISH

Wiring Diagram for the Analog Input

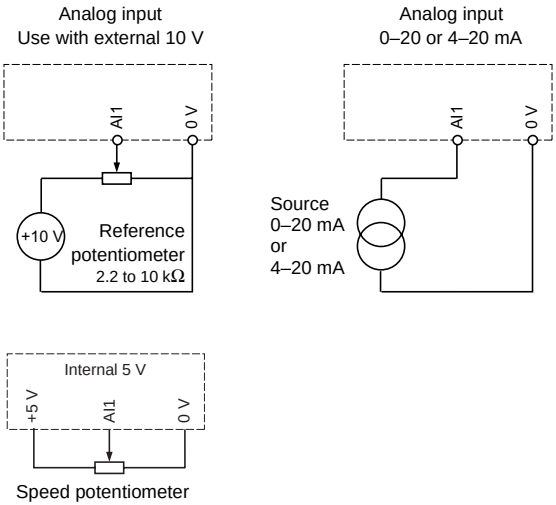

© 2003 Schneider Electric All Rights Reserved

ENGLISH

PROGRAMMING

Precautions

⚠ DANGER

UNINTENDED EQUIPMENT OPERATION

- Before powering up and configuring the drive controller, ensure that the logic inputs are open (state 0) to prevent an accidental startup. Otherwise, an input assigned to the run command may cause the motor to start immediately on exiting the configuration menus.
- Ensure that changes to the current operating settings do not present any danger. Changes must be made with the drive controller stopped.

Failure to follow these instructions will result in death or serious injury.

CAUTION

RAPID CONTACTOR CYCLING

- With power switching via a line contactor, avoid operating the contactor frequently. Use inputs LI1 to LI4 to control the drive controller.
- These instructions are vital for cycles of less than five minutes to avoid damaging the precharge resistor and capacitors.

Failure to follow these instructions can result in equipment damage.

© 2003 Schneider Electric All Rights Reserved

ENGLISH

Programming the Drive Controller: E (European) and U (North American) Ranges

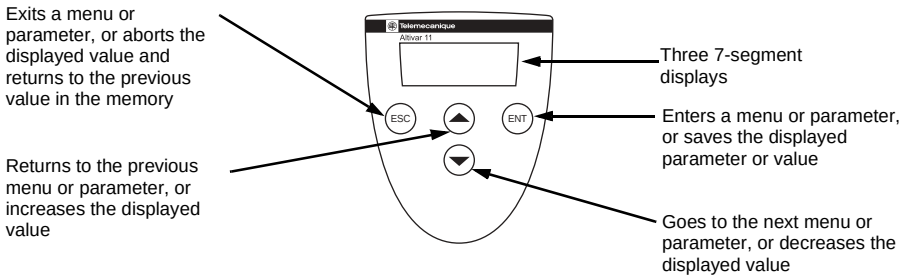

- To save the displayed choice, press ENT.
- Pressing ▲ or ▼ does not save the choice.
- The display flashes when a value is stored.

Programming Example

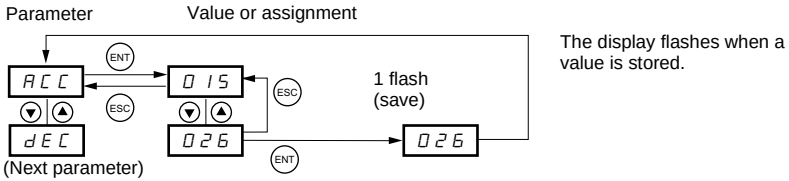

With no fault present and no run command, the normal display is one of the following:

- rdY: Drive controller ready
- 43.0: Display of the parameter selected in the SUP menu (default selection: reference frequency)
- dcb: DC injection braking in progress
- nSt: Freewheel stop

If there is a fault, the display flashes.

© 2003 Schneider Electric All Rights Reserved

ENGLISH

Programming the Drive Controller: A (Asian) Range

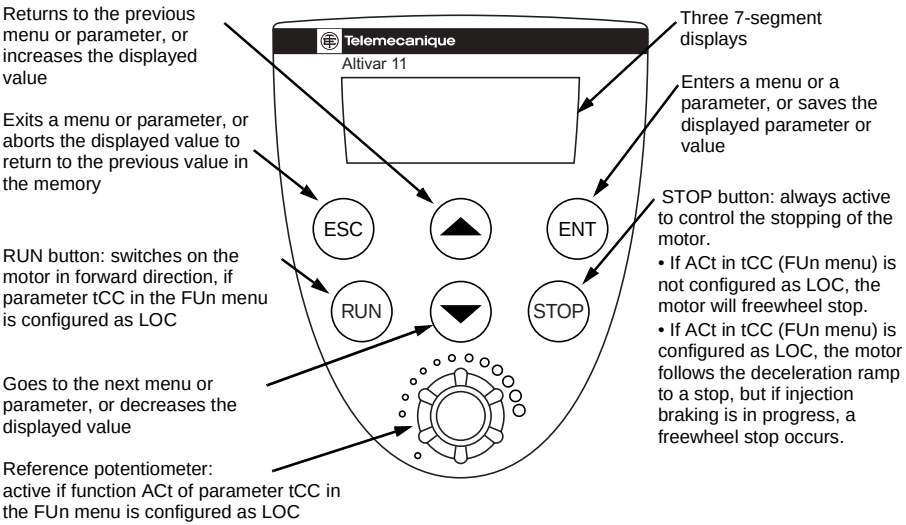

- To save the displayed choice, press (ENT).
- Pressing (▲) or (▼) does not save the choice.
- The display flashes when a value is stored.

With no fault present and no run command, the normal display is one of the following:

- rdY: Drive controller ready
- 43.0: Display of the parameter selected in the SUP menu (default selection: reference frequency)
- dcb: DC injection braking in progress
- nSt: Freewheel stop

If there is a fault, the display flashes.

© 2003 Schneider Electric All Rights Reserved

ENGLISH

ACCESS TO MENUS

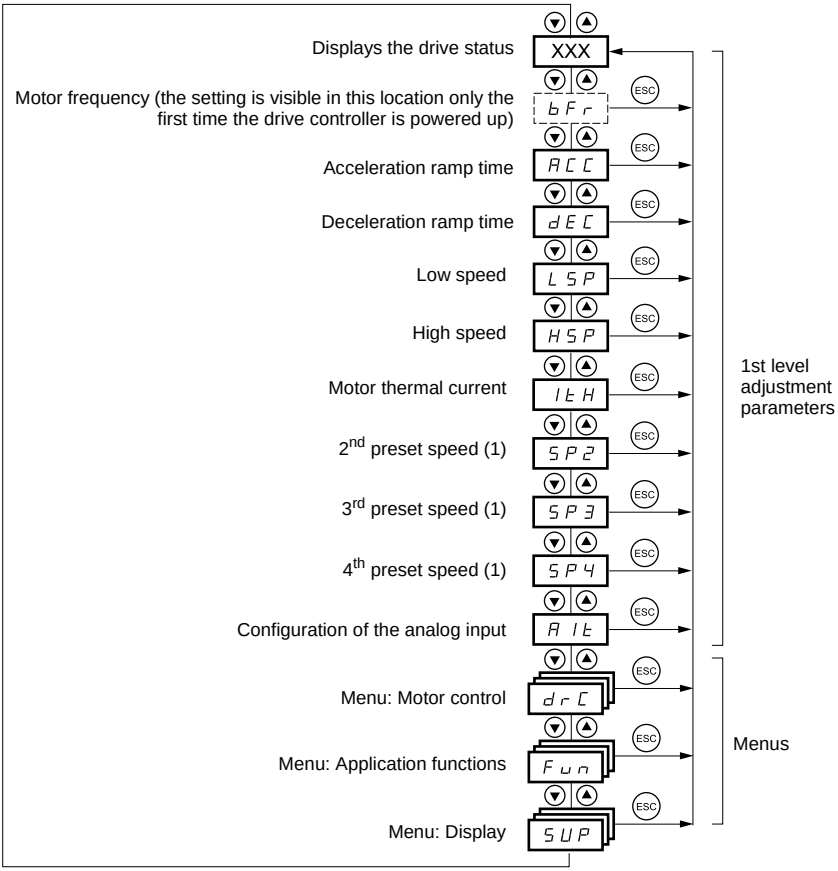

(1)The preset speeds appear only if PS2 remains at the factory setting or was reconfigured in the FUn menu.

© 2003 Schneider Electric All Rights Reserved

ENGLISH

FIRST LEVEL ADJUSTMENT PARAMETERS

The parameters in unshaded boxes can be modified only when the controller is stopped.

The parameters in shaded boxes can be modified with the controller operating or stopped.

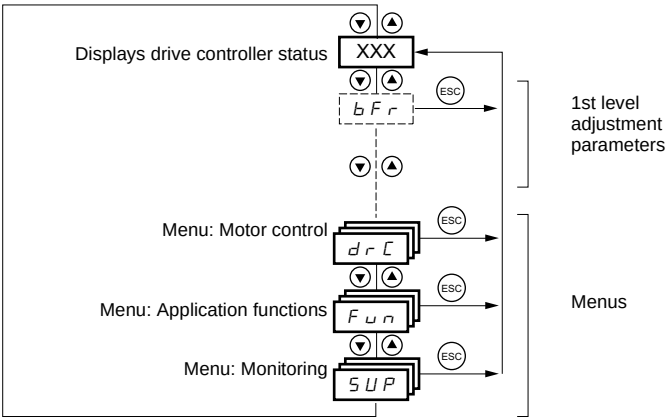

Table 13: First Level Adjustment Parameter Descriptions

Code	Description	Adjustment range	Factory setting
bFr	Motor frequency	50 or 60 Hz	60 Hz: U Range 50 Hz: A and E Ranges
	This parameter is displayed here only the first time the drive controller is powered up. You can modify it at any time in the FUn menu.		
ACC	Acceleration ramp time	0.1 s to 99.9 s	3
	Range: 0 Hz to motor nominal frequency FrS (parameter in drC menu).		
dEC	Deceleration ramp time	0.1 s to 99.9 s	3
	Range: motor nominal frequency FrS (parameter in drC menu) to 0 Hz.		
LSP	Low speed	0 Hz to HSP	0
HSP	High speed	LSP to 200 Hz	= bFr
	Ensure that this setting is appropriate for the motor and the application.		
ItH	Motor thermal current	0 to 1.5 I_N [1]	According to rating
	Current used for motor thermal protection. Set ItH to the nominal current on the motor nameplate. The motor thermal state memory is reset to zero when the drive controller is powered down.		
SP2	2nd preset speed [2]	0.0 to 200 Hz	10
SP3	3rd preset speed [2]	0.0 to 200 Hz	25
SP4	4th preset speed [2]	0.0 to 200 Hz	50

© 2003 Schneider Electric All Rights Reserved

ENGLISH

Table 13: First Level Adjustment Parameter Descriptions *(continued)*

Code	Description	Adjustment range	Factory setting
AIt	Configuration of the analog input	5 V, 10 V, 0 mA, 4 mA	5 V
	- 5U: voltage, 0–5 V (internal power supply) - 10U: voltage, 0–10 V (external power supply) - 0A: current, 0–20 mA - 4A: current, 4–20 mA		

[1] I_N = nominal drive controller current.

[2] Appears only if function PS2 remains at the factory setting or was reconfigured in the FUn menu. Settings for preset speeds below LSP and above HSP have no effect, because LSP and HSP take precedence.

© 2003 Schneider Electric All Rights Reserved

ENGLISH

drC MOTOR CONTROL MENU

The parameters in unshaded boxes can be modified only when the controller is stopped.

The parameters in shaded boxes can be modified with the controller operating or stopped.

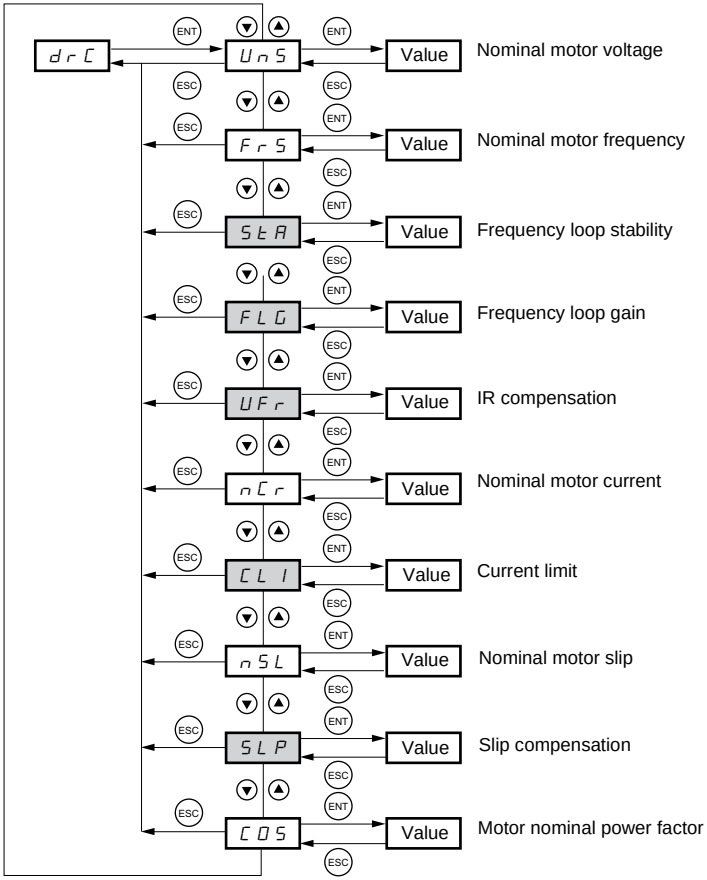

© 2003 Schneider Electric All Rights Reserved

ENGLISH

Table 14: drC Motor Control Parameters

Code	Description	Adjustment range	Factory setting
UnS	Nominal motor voltage marked on the nameplate.	100 to 500 V	According to rating
FrS	Nominal motor frequency marked on the nameplate.	40 to 200 Hz	50/60 Hz depending on bFr
StA	Frequency loop stability	0 to 100% stopped 1 to 100% operating	20
	Value too high: extension of response time Value too low: speed exceeded, possible instability.		
FLG	Frequency loop gain	0 to 100% stopped 1 to 100% operating	20
	Value too high: speed exceeded, instability. Value too low: extension of response time		
UFr	IR compensation Used to optimize the torque at very low speed, or to adapt the torque to special applications (for ex., motors connected in parallel require lower UFr).	0 to 200%	50
nCr	Nominal motor current marked on the nameplate	0.25 to 1.5 I_N	According to rating
CLI	Limiting current	0.5 to 1.5 I_N	1.5 I_N
nSL	Nominal motor slip	0 to 10.0 Hz	According to rating
	Calculate using the formula: nSL = parameter FrS x (1 - Nn/Ns) Nn = nominal motor speed marked on the nameplate Ns = motor synchronous speed		
SLP	Slip compensation	0 to 150% of nSL	100
	Used to adjust the slip compensation around the value set by the nominal motor slip nSL, or to adapt the slip compensation to special applications (for example, motors connected in parallel require lower SLP).		
COS	Nominal motor power factor marked on the nameplate	0.50 to 1.00	According to rating

⚠ CAUTION

MOTOR OVERHEATING

- This drive controller does not provide direct thermal protection for the motor.
- Use of a thermal sensor in the motor may be required for protection at all speeds or loading conditions.
- Consult the motor manufacturer for the thermal capability of the motor when operated across the desired speed range.

Failure to follow this instruction can result in injury or equipment damage.

© 2003 Schneider Electric All Rights Reserved

ENGLISH

FUn APPLICATION FUNCTIONS MENU

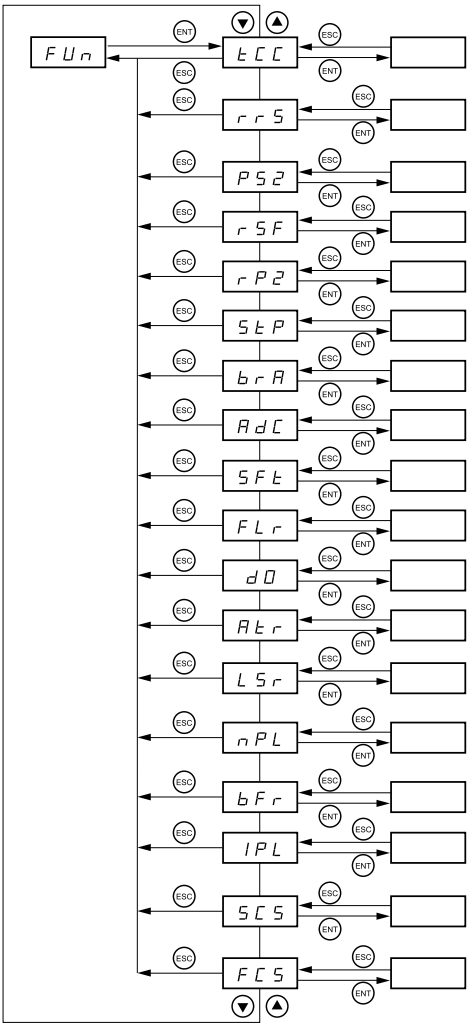

Type of control (see page 47)

Reverse (see page 48)
(2nd direction of operation)

Preset speeds (see page 48)

Fault reset (see page 48)

Second ramp (see page 50)

Controlled stop on loss of line supply
(see page 50)

Deceleration ramp adaptation (see page 50)

Automatic DC injection (see page 51)

Switching frequency (see page 51)

Catch on the fly (see page 53)

Assignment as logic/analog output
(see page 53)

Automatic restart (see page 55)

Frequency reference mode
(Range A only, see page 55)

Choice of logics for inputs
(Range A only, see page 55)

Motor frequency (see page 57)

PHF fault configuration
(3-phase ratings only, see page 57)

Configuration backup (see page 57)

Reset the configuration (see page 57)

© 2003 Schneider Electric All Rights Reserved

ENGLISH

Incompatible Application Functions

The following application functions are inaccessible or deactivated as described below:

- Automatic restart is only possible in 2-wire control (ACt in tCC = 2C and tCt in tCC = LEL or PFO). Changing the type of control deactivates the function.
- Catch on the fly is only possible in 2-wire control. Changing the type of control deactivates the function.

  Catch on the fly is inaccessible if continuous automatic DC injection is configured (AdC = Ct). Switching to continuous automatic DC injection (ADC = Ct) deactivates the function.
- For A range controllers, the reverse function is inaccessible if local control is active (ACt in tCC = LOC).

NOTE: Multiple functions can be assigned to a single logic input, and function simultaneously. If FWD and REV are assigned to the same logic input, FWD takes precedence.

© 2003 Schneider Electric All Rights Reserved

tCC Menu

Type of control

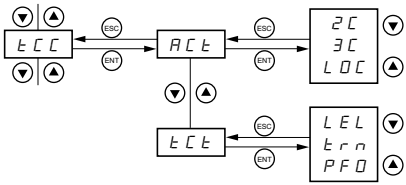

Table 15: Parameter tCC

Code		Description	Factory Setting
tCC		**Type of control**	
	ACt	2C = 2-wire control 3C = 3-wire control LOC = Local control 2-wire control: The state of the input, open or closed (1 or 0), controls running or stopping. Example of wiring: 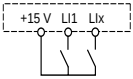 LI1: forward LIx: reverse 3-wire control (pulse control): a forward or reverse pulse is sufficient for a start command; a stop pulse is sufficient for a stop command. Example of wiring: 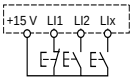 LI1: stop LI2: forward LIx: reverse Local control: The Run/Stop button is always active to control the stopping of the motor. If tCC is not configured as LOC, the motor will freewheel stop. If tCC is configured as LOC, the motor follows the deceleration ramp to a stop, but if injection braking is in progress, a freewheel stop takes place. NOTE: To change the assignment of tCC, press the **ENT** key for 2 s. This causes the following functions to return to factory setting: rrS, tCt, Atr, PS2 (LIA, LIb).	2C
	tCt	**Type of 2-wire control** (parameter can only be accessed if tCC = 2C): LEL: If the forward or reverse input is high when the drive controller is powered up, the drive controller will start the motor. If both inputs are high on power up, the controller will run forward. trn: The drive controller must see a transition from low to high of the forward or reverse input before it will start the motor. Therefore, if the forward or reverse input is high when the drive controller is powered up, the input must be cycled before the drive controller will start the motor. PFO: Same as LEL, except the forward input has priority over the reverse input with this control. If forward is activated while the controller is running in reverse, the controller will run forward.	trn

© 2003 Schneider Electric All Rights Reserved

ENGLISH

ENGLISH

rrS, PS2, and rSF Menus

The parameters in unshaded boxes can be modified only when the controller is stopped.

The parameters in shaded boxes can be modified with the controller operating or stopped.

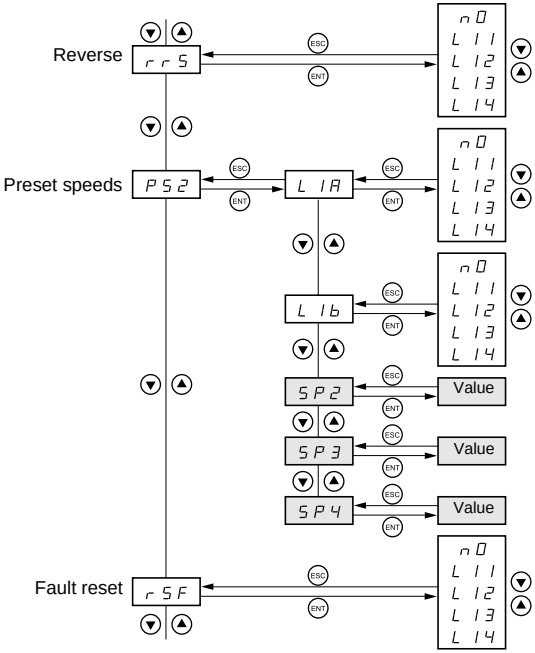

© 2003 Schneider Electric All Rights Reserved

ENGLISH

Table 16: Parameters rrS, PS2, rSF

Code	Description	Factory Setting
rrS	**Reverse** nO: function inactive LI1 to LI4: selects the input assigned to the reverse command	if ACt in tCC = 2C: LI2 if ACT in tCC = 3C: LI3
PS2	**Preset speeds**[1] If LIA and LIb = 0: speed = reference on AI1 If LIA = 1 and LIb = 0: speed = SP2 If LIA = 0 and LIb = 1: speed = SP3 If LIA = 1 and LIb = 1: speed = SP4	
LIA	Assignment of input LIA - nO: function inactive - LI1 to LI4: selects the input assigned to LIA	if ACt in tCC = 2C: LI3 if ACt in tCC = 3C: LI4
LIb	Assignment of input LIb - nO: function inactive - LI1 to LI4: selects the input assigned to LIb SP2 is accessible only if LIA is assigned; SP3 and SP4 are accessible only if LIA and LIb are assigned.	if ACt in tCC = 2C: LI4 if ACT in tCC = 3C: nO
SP2	2nd preset speed, adjustable from 0.0 to 200 Hz	10
SP3	3rd preset speed, adjustable from 0.0 to 200 Hz	25
SP4	4th preset speed, adjustable from 0.0 to 200 Hz	50
rSF	**Fault reset** - nO: function inactive - LI1 to LI4: selects the input assigned to this function The fault reset occurs when the input changes state on the rising edge (0 to 1). The fault is reset only if the cause of the fault is no longer present.	nO

[1] See page 33.

© 2003 Schneider Electric All Rights Reserved

ENGLISH

rP2, StP, and brA Menus

The parameters in unshaded boxes can be modified only when the controller is stopped.

The parameters in shaded boxes can be modified with the controller operating or stopped.

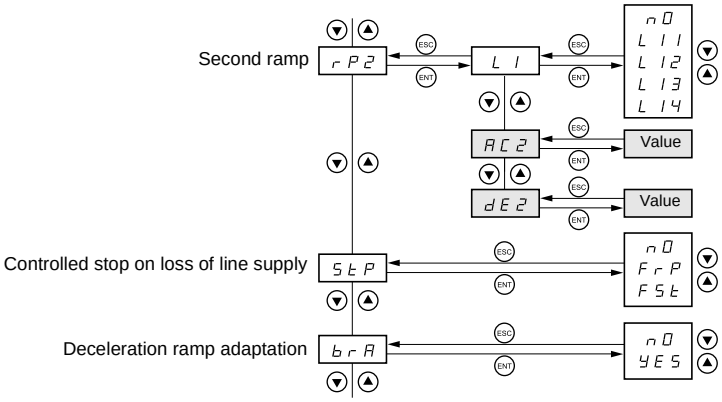

Table 17: rP2, StP, brA Parameters

Code		Description	Factory Setting
rP2		**Ramp Switching**	
	LI	Assignment of the 2nd ramp control input - nO: function inactive - LI1 to LI4: selects the input assigned to the function. AC2 and dE2 are accessible only if LI is assigned.	nO
	AC2 dE2	2nd acceleration ramp time, adjustable from 0.1 to 99.9 s 2nd deceleration ramp time, adjustable from 0.1 to 99.9 s	5.0 5.0
StP		**Controlled stop on loss of line supply** - nO: function inactive, motor freewheels - FrP: stop according the valid ramp (dEC or dE2) - FSt: fast stop, the stopping time depends on the inertia of the load and the braking capability of the drive controller.	nO
brA		**Deceleration ramp adaptation** - nO: function inactive - YES: automatically increases the deceleration time if set too low for the inertia of the load, thus avoiding an overvoltage fault.	YES

© 2003 Schneider Electric All Rights Reserved

ENGLISH

AdC and SFt Menus

The parameters in unshaded boxes can be modified only when the controller is stopped.

The parameters in shaded boxes can be modified with the controller operating or stopped.

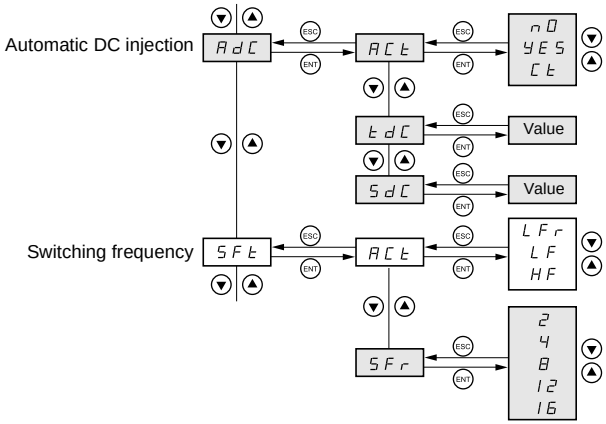

Table 18: Parameters AdC and SFt

Code		Description	Factory Setting
AdC		**Automatic DC injection**	
	ACt	Operating mode - nO: function inactive - YES: DC injection is activated at the end of each stop cycle. The injection time is adjustable via tdC. The injection current is adjustable via SdC. - Ct: Continuous DC injection is activated at the end of each stop cycle. The value of this current can be adjusted via SdC. In 3-wire control, the injection is active only when LI1 is at 1.	YES
	tdC	Injection time on stopping, adjustable from 0.1 to 30.0 s. Accessible only if ACt =YES.	0.5 s
	SdC	Injection current, adjustable from 0 to 1.5 I_n. Accessible only if ACt = YES or Ct.	0.7 I_n

© 2003 Schneider Electric All Rights Reserved

ENGLISH

Table 18: Parameters AdC and SFt *(continued)*

Code		Description	Factory Setting

⚠ WARNING

NO HOLDING TORQUE

- DC injection braking does not provide holding torque at zero speed.
- DC injection braking does not function during loss of power or during a drive controller fault.
- When required, use a separate brake for holding torque.

EXCESSIVE DC INJECTION BRAKING

- Application of DC injection braking for long periods of time can cause motor overheating and damage.
- Protect the motor from extended periods of DC injection braking.

Failure to follow this instruction can result in death, serious injury, or equipment damage.

SFt		**Switching frequency**	
	ACt	Frequency range - LFr : random frequency around 2 or 4 kHz according to SFr - LF : fixed frequency of 2 or 4 kHz according to SFr - HF : fixed frequency of 8, 12, or 16 kHz according to SFr	LF
	SFr	Switching frequency: - 2 : 2 kHz (if ACt = LF or LFr) - 4 : 4 kHz (if ACt = LF or LFr) - 8 : 8 kHz (if ACt = HF) - 12 : 12 kHz (if ACt = HF) - 16 : 16 kHz (if ACt = HF) When SFr = 2 kHz, the frequency automatically changes to 4 kHz at high speed. When SFt = HF, the selected frequency automatically changes to the lower frequency if the thermal state of the drive controller is too high. It automatically returns to the SFr frequency as soon as the thermal state permits.	4 (if ACt = LF or LFr) 12 (if ACt = HF)

© 2003 Schneider Electric All Rights Reserved

FLr and dO Menus

The parameters in unshaded boxes can be modified only when the controller is stopped.

The parameters in shaded boxes can be modified with the controller operating or stopped.

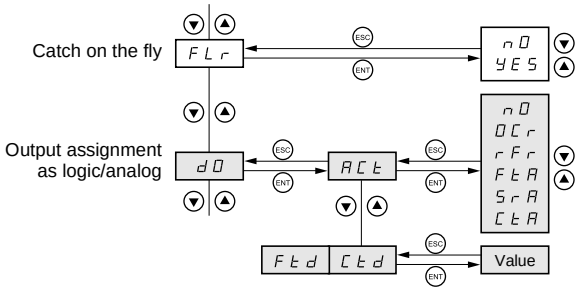

Table 19: Parameters FLr and dO

Code	Description	Factory Setting
FLr	**Catch on the fly** Enables a smooth restart if the run command is maintained after the following events: - loss of line supply or removal of power - fault reset or automatic restart - freewheel stop The motor resumes from the estimated speed at the time of the restart, then follows the ramp to the reference speed. This function requires 2-wire control (ACt in tCC = 2C) with tCt in tCC = LEL or PFO. nO: function inactive YES: function active This function intervenes at each run command, resulting in a start after a delay of 1 second maximum. If continuous automatic injection braking is configured (Ct) this function is inactive.	nO

© 2003 Schneider Electric All Rights Reserved

ENGLISH

Table 19: Parameters FLr and dO *(continued)*

Code		Description	Factory Setting
dO		**Analog/logic output DO**	
	ACt	Assignment - nO: not assigned - OCr : output/motor current (analog output). The full signal corresponds to 200% of the nominal drive controller current. - rFr : motor frequency (analog output). The full signal corresponds to 100% HSP. - FtA: frequency threshold attained (logic output), closed (state 1) if the motor frequency exceeds the adjustable threshold Ftd. - SrA: reference attained (logic output), closed (state 1) if the motor frequency is equal to the reference. - CtA: current threshold attained (logic output), closed (state 1) if the motor current exceeds the adjustable threshold Ctd. Ftd is accessible only if ACt = FtA. Ctd is accessible only if ACt = CtA.	rFr
	Ftd	frequency threshold, adjustable from 0 to 200 Hz.	= bFr
	Ctd	current threshold, adjustable from 0 to 1.5 I_n.	I_n

© 2003 Schneider Electric All Rights Reserved

Atr, LSr, and nPL Menus

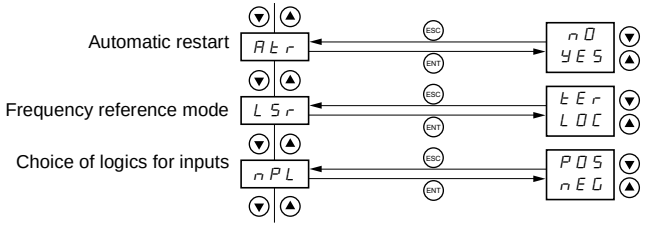

Table 20: Parameters Atr, LSr, and nPL

Code	Description	Factory Setting
Atr	**Automatic restart** - nO: function inactive - YES: Allows automatic restart after stopping on a fault, if the fault has been cleared and the other operating conditions permit the restart. A series of automatic restart attempts are separated by increasingly long waiting periods: 1 s, 5 s, and 10 s, then 1 min for the remaining periods. If the restart does not occur after 6 min, the procedure is aborted and the drive controller remains in a fault state until the power is cycled. The following faults permit automatic restart: OHF, OLF, ObF, OSF, and PHF. The drive controller fault relay remains activated if this function is active. The speed reference and the operating direction must be maintained. Automatic restart is only accessible in 2-wire control (ACT in tCC = 2C) with tCt in tCC = LEL or PFO.	nO

⚠ WARNING

UNINTENDED EQUIPMENT OPERATION

- Automatic restart can only be used for machines or installations that present no danger to personnel or equipment in the event of automatic restarting.
- If automatic restart is active, R1 will only indicate a fault after the restart sequence has timed out.
- Equipment operation must conform with national and local safety regulations.

Failure to follow this instruction can result in death, serious injury, or equipment damage.

© 2003 Schneider Electric All Rights Reserved

ENGLISH

Table 20: Parameters Atr, LSr, and nPL *(continued)*

Code	Description	Factory Setting
LSr	**Frequency reference mode** This parameter is only accessible on A range drive controllers. - LOC: the speed reference is given by the potentiometer on the front of the drive controller. - tEr: the speed reference is given by analog input AI1. For LOC and tEr to be taken into account, the ENT key must be held down for 2 s.	LOC
nPL	**Choice of Logic for inputs** This parameter is only accessible on A range drive controllers. - POS: the inputs are active (state 1) at a voltage of 11 V or more (for example, +15 V terminal) and inactive (state 0) when the drive controller is disconnected, or at a voltage of less than 5 V. - nEG: the inputs are active (state 1) at a voltage of less than 5 V (for example, 0 V terminal) and inactive (state 0) at a voltage of 11 V or more, or when the drive is disconnected. For POS and nEG to be taken into account, the ENT key must be held down for 2 s.	POS

© 2003 Schneider Electric All Rights Reserved

ENGLISH

bFr, IPL, SCS, and FCS Menus

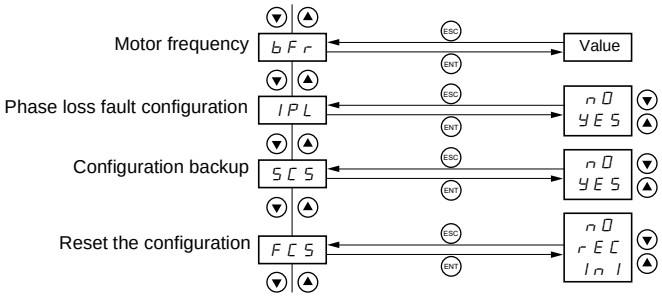

Table 21: Parameters bFr, IPL, SCS, and FCS

Code	Description	Factory Setting
bFr	**Motor frequency** (Same as bFr 1st level adjustment parameter) Set to 50 Hz or 60 Hz, depending on the motor nameplate rating.	60
IPL	**Line phase loss fault configuration** This parameter is only accessible on 3-phase drive controllers. - nO: inhibits the line phase loss fault - YES: activates monitoring for a line phase loss	YES
SCS	**Configuration backup** - YES: saves the current configuration in EEPROM memory as a backup configuration. SCS automatically switches to nO as soon as the save is complete. Drive controllers ship with both the current configuration and the backup configuration set to the factory configuration.	nO
FCS	**Reset the configuration** - nO: function inactive - rEC: resets the configuration to the backup configuration previously saved using SCS. rEC is only visible if a backup has been performed. FCS automatically switches to nO as soon as the reset is complete. - InI: resets the configuration to the factory setting. FCS automatically switches to nO as soon as the reset is complete. NOTE: To perform the rEC and InI commands, you must hold down the **ENT** key for 2 s.	nO

© 2003 Schneider Electric All Rights Reserved

ENGLISH

SUP DISPLAY MENU

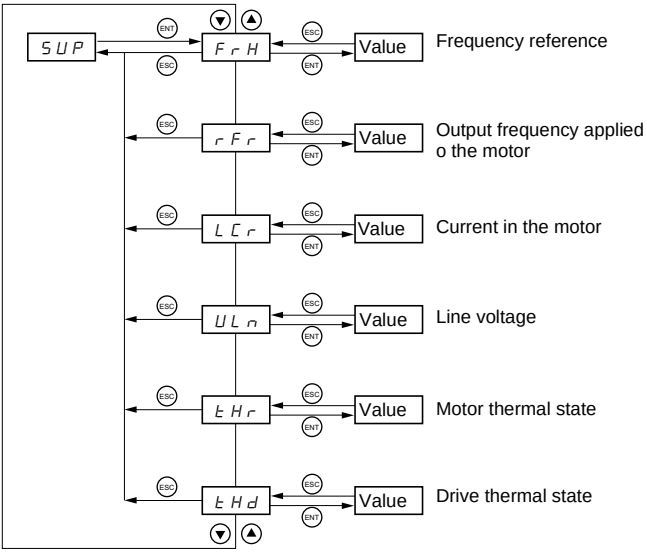

When the drive controller is running, it displays the value of one of the monitoring parameters. The default display is frequency reference (parameter FrH).

To change the display, scroll to the desired monitoring parameter and press ENT to display its value. While this value is being displayed, press ENT a second time to confirm the change of the parameter and to store it. From now on, the value of this parameter is displayed while the drive controller is running (even after it has been disconnected). If the new selection is not confirmed in this way, the display returns to the previous parameter after the drive controller is disconnected.

© 2003 Schneider Electric All Rights Reserved

ENGLISH

MAINTENANCE AND TROUBLESHOOTING

Precautions

Read the following safety statements before proceeding with any maintenance or troubleshooting procedures.

⚠ DANGER

HAZARDOUS VOLTAGE

- Read and understand these procedures and the precautions on page 2 of this manual before servicing ATV11 drive controllers.
- Installation, adjustment, and maintenance of these drive controllers must be performed by qualified personnel.

Failure to follow this instruction will result in death or serious injury.

The maintenance and troubleshooting procedures in this section are intended for use by qualified electrical maintenance personnel and should not be viewed as sufficient instruction for those who are not otherwise qualified to operate, service, or maintain the equipment.

Routine Maintenance

Perform the following steps at regular intervals:

- Check the condition and tightness of the connections.
- Make sure that the ventilation is effective and that the temperature around the drive controller remains at an acceptable level.
- Remove dust and debris from the drive controller, if necessary.

Fault Detection

If a fault is detected, the drive controller trips and the fault relay deenergizes unless Atr is active. See parameter Atr on page 55 for a description of automatic restart. See Table 22 on page 62 for fault descriptions. All faults can be reset by cycling the power to the drive controller.

When taking corrective action, verify that there is no voltage present on the DC bus (see the bus voltage measurement procedure on page 23), then check the supply voltage and peripheral equipment as outlined below.

© 2003 Schneider Electric All Rights Reserved

ENGLISH

Procedure 1: Checking the Supply Voltage

To measure the input line voltage:

1. Remove all input line voltage.
2. Attach meter leads to L1 and L2. Set the voltmeter to the 600 Vac scale.
3. Reapply power and check for the correct line voltage, according to the drive controller nameplate rating.
4. Remove power. If the controller is wired for three phase, repeat the procedure for L2 and L3, and L1 and L3.
5. When all phases have been measured, remove power. Remove leads and reinstall covers.

Procedure 2: Checking the Peripheral Equipment

Check the equipment for the following conditions. Follow the manufacturer's procedures.

1. A protective device such as fuses or a circuit breaker may have tripped.
2. A switching device such as a contactor may not be closing at the correct time.
3. Conductors may require repair or replacement.
4. Connection cables to the motor or to ground may be loose. Follow NEMA standard procedure WC-53.

   NOTE: Bus voltage can exceed 400 Vdc. Use appropriately-rated measuring equipment.

5. The motor insulation may be worn. Follow NEMA standard procedure MG-1. Do not apply high voltage to U, V, or W (see Table 9 on page 26). Do not connect high potential dielectric test equipment or an insulation resistance tester to the drive controller, since the test voltages used may damage it. Always disconnect the drive controller from the conductors or motor while performing such tests.

© 2003 Schneider Electric All Rights Reserved

ENGLISH

⚠ CAUTION

DIELECTRIC TESTS, WHEN CONNECTED

- Do not perform high potential dielectric tests on circuits while the circuits are connected to the drive controller.
- Any circuit requiring high potential dielectric tests must be disconnected from the drive controller before performing the test.

Failure to follow this instruction can result in injury or equipment damage.

FAULT STORAGE

An existing fault is saved and displayed on the keypad display as long as power is maintained. When the drive controller trips, the fault relay deenergizes. To reset the fault:

- Remove power from the drive controller.
- Identify and correct the cause of the fault.
- Restore power. This resets the fault if it has been corrected.

In certain cases, if automatic restart is enabled, the drive controller automatically restarts after the cause of the fault is removed. Refer to the description of Atr on page 55.

© 2003 Schneider Electric All Rights Reserved

ENGLISH

LIST OF FAULTS AND CORRECTIVE ACTION

Faults cannot be reset until the cause is removed. Faults OHF, OLF, OSF, ObF, and PHF can be reset via a logic input (rSF) if configured for this function. Faults OHF, OLF, OSF, ObF, and PHF can be reset via automatic restart (Atr) if configured for this function and if the drive controller is configured for 2-wire control. Fault USF resets as soon as the fault is removed; neither a logic input nor automatic restart is required for the reset. All faults can be reset by cycling the power.

Table 22: List of Faults

Fault	Probable cause	Corrective Action
- CFF configuration fault		- Restore the factory settings or the backup configuration, if it is valid. See parameter FCS in the FUn menu (see page 57).
- CrF precharge circuit	- precharge circuit damaged	- Reset the drive controller. - Replace the drive controller.
- InF internal fault	- internal fault - internal connection fault	- Remove sources of electromagnetic interference. - Replace the drive controller.
- ObF overvoltage during deceleration	- braking too rapidly or overhauling load	- Increase the deceleration time. - Install a braking resistor if necessary. - Activate the brA function if it is compatible with the application.
- OCF overcurrent	- acceleration too rapid - drive controller and/or motor undersized for load - mechanical blockage	- Increase acceleration time. -Ensure that the size of the motor and drive controller is sufficient for the load. - Clear mechanical blockage.
- OHF drive controller overload	- continuous motor current load too high - ambient temperature too high	- Check the motor load, the drive controller ventilation, and the environment. Wait for the controller to cool before restarting. - Increase ACC for high inertia loads.
- OLF motor overload	- thermal trip due to prolonged motor overload - motor power rating too low for the application	- Check the setting of the motor thermal protection (ItH). See page 41. Check the motor load. Wait for the motor to cool before restarting.
- OSF overvoltage during steady state operation or during acceleration	- line voltage too high - induced voltage on output wiring	- Check the line voltage. Compare with the drive controller nameplate ratings. - Reset the drive controller. - Verify that the wiring is correct (see pages 23–29).
- PHF input phase failure	- input phase loss, blown fuse - input phase imbalance - transient phase fault - 3-phase controller used on a single phase line supply - unbalanced load	- Verify that the input power is correct. - Check the line fuses. - Verify input power connections. - Supply 3-phase power if needed. - Disable IPL (set to nO).

© 2003 Schneider Electric All Rights Reserved

ENGLISH

Table 22: List of Faults *(continued)*

Fault	Probable cause	Corrective Action
- SCF motor short circuit	- short-circuit or grounding at the drive controller output	- Check the cables connecting the drive controller to the motor, and check the insulation of the motor.
- SOF overspeed	- instability - overhauling load	- Check the motor, gain, and stability parameters. - Add a braking module and resistor and verify the drive controller, motor, and load.
- USF undervoltage	- input voltage too low - transient voltage dip - damaged precharge resistor	- Check that the line voltage matches the nameplate rating. - Check the setting of parameter UnS. - Replace the drive controller.

Drive Controller Does Not Start, No Fault Displayed

On power-up, a manual fault reset, or after a stop command, the motor can be powered only after the forward and reverse commands are reset (unless tCt = LEL or PFO). If they have not been reset, the drive controller displays "rdY" or NST, but does not start. If the automatic restart function is configured (parameter Atr in the drC menu) and the drive controller is in 2-wire control, these commands are taken into account without a reset.

© 2003 Schneider Electric All Rights Reserved

ENGLISH

CONFIGURATION AND SETTINGS TABLES

ATV11 controller catalog no._____

Customer identification no._____

Table 23: First Level Adjustment Parameters

Code	Factory Setting		Customer Setting		Code	Factory Setting		Customer Setting	
bFr	50 / 60	Hz		Hz	LSP	0	Hz		Hz
ACC	3	s		s	HSP	50 /60	Hz		Hz
dEC	3	s		s	ItH		A		A

Table 24: Motor Control Menu drC

Code	Factory Setting		Customer Setting		Code	Factory Setting		Customer Setting	
UnS		V		V	nCr		A		A
FrS	50 / 60	Hz		Hz	CLI		A		A
StA	20	%		%	nSL		Hz		Hz
FLG	20	%		%	SLP	100	%		%
UFr	50	%		%	COS				

© 2003 Schneider Electric All Rights Reserved

ENGLISH

Table 25: Application Functions Menu FUn

Code	Factory setting		Customer setting		Code	Factory setting		Customer setting	
tCC					AdC				
ACt	2C				ACt	YES			
tCt	trn				tdC	0.5	s		s
rrS	LI2				SdC		A		A
PS2					SFt				
LIA	LI3				ACt	LF			
LIb	LI4				SFr	4	kHz		kHz
SP2	10	Hz		Hz	FLr	nO			
SP3	25	Hz		Hz	dO				
SP4	50	Hz		Hz	ACt	rFr			
rSF	nO				Ftd	50 / 60	Hz		Hz
rP2					Ctd		A		A
LI	nO				AIt	5U			
AC2	5	s		s	Atr	nO			
dE2	5	s		s	LSr [1]	LOC			
StP	nO				nPL [1]	POS			
brA	YES				bFr	50 / 60	Hz		Hz
					IPL	YES			

[1] **A range only.**

© 2003 Schneider Electric All Rights Reserved

ENGLISH

© 2003 Schneider Electric All Rights Reserved

ENGLISH

A
AC2 50
ACC 41
acceleration
  ramp time 41
  second ramp time 50
ACt 47, 51—52, 54
AdC 51
agency approvals 13
AIC rating
  power supply 14
AIt 42
altitude 13
application functions
  DO output 34
  logic input 32
Atr 55
automatic restart 61

B
bFr 41, 57
brA 50
braking
  torque 14
braking module 26
bus voltage measurement 23

C
cable 14, 25
capacitors 25
catalog number 9—11
catch on the fly 53
CE markings 13
CFF 62
clearances 17
CLI 44
condensation 22
configuration
  backup 57
  fault 62
  reset 57
control
  three-wire 32, 47
  two-wire 32, 47
COS 44
CrF 62
Ctd 54
current
  limiting 44
  max. line 9—11
  max. transient 9—11, 14
  motor 34
  motor thermal 41
  nominal 9—11
  nominal motor 44
  threshold 34, 54

D
DB resistance values 12
DC injection 51
  current 51
  time 51
dE2 50
dEC 41
deceleration
  ramp adaptation 50
  ramp time 41
  second ramp time 50
dielectric tests 61
dimensions 16
direction
  forward operation 32
  reverse operation 32
display 38—39
dO 54
DO output 15

E
electromagnetic compatibility 13, 30—31
EMC mounting plate 31
emissions 13
enclosure
  IP54 20
  sizing 20, 22
  thermal resistance 20
  type 12 20
  ventilation 22
ENT button 38—39
ESC button 38—39

F
fan 18, 22
fault
  corrective actions 62
  detection 59
  list of 62
  relay contact 28
  reset 33, 49, 59, 61
  storage 61
FCS 57
FLG 44
FLr 53
frequency
  loop gain 44
  loop stability 44
  motor 34, 41, 57
  nominal motor 44
  output 14
  power supply 14
  reference 56
  resolution 15
  switching 9—11, 14, 52
  threshold 34, 54
FrP 50
FrS 44
FSt 50
Ftd 54
fuses 24, 27

G
galvanic isolation 14
grounding 23
  terminal 26

H
heater 22
high speed 41
holding torque 52
HSP 41
humidity 13

I
incompatibility
  application functions 46
InF 62
input
  analog 14, 28, 35, 42
  logic 15, 28, 32, 56
  phase failure 62
inspection 8
internal fault 62
internal supplies 14
IPL 57
IR compensation 44
ItH 41

L
LI 50
LIA 49

© 2003 Schneider Electric All Rights Reserved

ENGLISH

LIb 49
lightning arrestors 25
line
  contactor 37
  phase loss 57
LOC 56
low speed 41
LSP 41
LSr 56

M

maintenance 59
menus
  drC motor control 43
  FUn application functions 45–57
  overview 40
  SUP display 58
motor thermal current 41
mounting
  in enclosure 20
  precautions 17

N

nCr 44
nEG 56
noise suppressors 25
nPL 56
nSL 44

O

ObF 62
OCF 62
OHF 62
OLF 62
OSF 62
output
  DO 15, 28, 54
  relay 15
overcurrent 15, 24, 62
overheating 15
overload 14
  controller 62
  motor 62
overspeed 63
overtorque 14
overvoltage 15
  during acceleration 62
  during deceleration 62
  during steady state
  operation 62

P

parameters
  drC motor control 43
  factory settings 64–65
  first level adjustment 41
  FUn application functions 45–57
  monitoring 58
  SUP display 58
PHF 62
POS 56
potentiometer 14, 28, 39
power factor 44
precharge circuit fault 62
preset speeds 33, 41, 49
programming 37–39
  precautions 37
protection
  branch circuit 24
  controller 15
  degree of 13
  motor 15
  overcurrent 24
  thermal 44
PS2 49
PTC probe 9–11, 15

R

range 7
ratings 7, 9–11
receiving 8
reference reached 34
restart
  automatic 55, 61
reverse 49
rP2 50
rrS 49
rSF 49
RUN button 39

S

SCF 63
SCS 57
SdC 51
second ramp 50
SFr 52
SFt 52
shipping damage 8
shock 13
short circuit 14–15, 33
  motor 63
slip
  compensation 44
  nominal motor 44
SLP 44
SOF 63
SP2 41, 49
SP3 41, 49
SP4 41, 49
speed 14
StA 44
stop
  controlled 50
  fast 50
  freewheel 50
  on ramp 50
STOP button 39
storage 8
StP 50
switching frequency 9–11, 14

T

tCC 47
tCt 47
tdC 51
temperature
  mounting 17
  operating 13
  storage 8, 13
tEr 56
terminals
  control 28
  power 25–26
torque
  braking 14

U

UFr 44
undervoltage 15, 63
UnS 44
USF 63

V

V/F ratio 14
ventilation 22
vibration 13
voltage
  bus 23

© 2003 Schneider Electric All Rights Reserved

nominal 9—11
nominal motor 44
output 14
power supply 14
supply 60

W

wiring
control 25
diagram 29
power 25

ENGLISH

© 2003 Schneider Electric All Rights Reserved

ENGLISH

© 2003 Schneider Electric All Rights Reserved